OMC942723054

HITACHI SINGLE-CHIP MICROCOMPUTER

H8/329 SERIES

H8/329
HD6473298, HD6433298, HD6413298

H8/328
HD6433288

H8/327
HD6473278, HD6433278, HD6413278

H8/326
HD6433268

HARDWARE MANUAL

Preface

The H8/329 Series is a series of high-performance single-chip microcomputers having a fast H8/300 CPU core and a set of on-chip supporting functions optimized for embedded control. These include ROM, RAM, two types of timers, a serial communication interface, an A/D converter, I/O ports, and other functions needed in control system configurations, so that compact, high-performance systems can be realized easily. The H8/329 Series includes four chips: the H8/329 with 32K-byte ROM and 1K-byte RAM; the H8/328 with 24K-byte ROM and 1K-byte RAM; the H8/327 with 16K-byte ROM and 512-byte RAM; and the H8/326 with 8K-byte ROM and 256-byte RAM.

The H8/329 and H8/327 are available in a masked ROM version, a ZTAT™* (Zero Turn-Around Time) version, and a ROMless version, providing a quick and flexible response to conditions from ramp-up through full-scale volume producion, even for applications with frequently-changing specifications.

This manual describes the hardware of the H8/329 Series. Refer to the *H8/300 Series Programming Manual* for a detailed description of the instruction set.

Notes: * ZTAT is a registered trademark of Hitachi, Ltd.

Contents

Section 1. Overview 1
1.1 Overview 1
1.2 Block Diagram 5
1.3 Pin Assignments and Functions 6
1.3.1 Pin Arrangement 6
1.3.2 Pin Functions 8

Section 2. MCU Operating Modes and Address Space 15
2.1 Overview 15
2.1.1 Mode Selection 15
2.1.2 Mode and System Control Registers (MDCR and SYSCR) 16
2.2 System Control Register (SYSCR)—H'FFC4 16
2.3 Mode Control Register (MDCR)—H'FFC5 18
2.4 Address Space Maps 19

Section 3. CPU 23
3.1 Overview 23
3.1.1 Features 23
3.2 Register Configuration 24
3.2.1 General Registers 24
3.2.2 Control Registers 25
3.2.3 Initial Register Values 26
3.3 Addressing Modes 27
3.3.1 Addressing Mode 27
3.3.2 How to Calculate Where the Execution Starts 29
3.4 Data Formats 33
3.4.1 Data Formats in General Registers 34
3.4.2 Memory Data Formats 35
3.5 Instruction Set 36
3.5.1 Data Transfer Instructions 38
3.5.2 Arithmetic Operations 40
3.5.3 Logic Operations 41
3.5.4 Shift Operations 41
3.5.5 Bit Manipulations 43
3.5.6 Branching Instructions 47
3.5.7 System Control Instructions 49

3.5.8 Block Data Transfer Instruction 50
3.6 CPU States 51
3.6.1 Program Execution State 52
3.6.2 Exception-Handling State 52
3.6.3 Power-Down State 53
3.7 Access Timing and Bus Cycle 53
3.7.1 Access to On-Chip Memory (RAM and ROM) 53
3.7.2 Access to On-Chip Register Field and External Devices 55

Section 4. Exception Handling 59
4.1 Overview 59
4.2 Reset 59
4.2.1 Overview 59
4.2.2 Reset Sequence 59
4.2.3 Disabling of Interrupts after Reset 62
4.3 Interrupts 62
4.3.1 Overview 62
4.3.2 Interrupt-Related Registers 64
4.3.3 External Interrupts 66
4.3.4 Internal Interrupts 67
4.3.5 Interrupt Handling 67
4.3.6 Interrupt Response Time 72
4.3.7 Precaution 72
4.4 Note on Stack Handling 73

Section 5. I/O Ports 75
5.1 Overview 75
5.2 Port 1 77
5.3 Port 2 80
5.4 Port 3 84
5.5 Port 4 88
5.6 Port 5 96
5.7 Port 6 100
5.8 Port 7 111

Section 6. 16-Bit Free-Running Timer 113
6.1 Overview 113
6.1.1 Features 113

6.1.2 Block Diagram 113
6.1.3 Input and Output Pins 115
6.1.4 Register Configuration 115
6.2 Register Descriptions 116
6.2.1 Free-Running Counter (FRC)—H'FF92 116
6.2.2 Output Compare Registers A and B (OCRA and OCRB)—H'FF94 117
6.2.3 Input Capture Registers A to D (ICRA to ICRD)—
H'FF98, H'FF9A, H'FF9C, H'FF9E 117
6.2.4 Timer Interrupt Enable Register (TIER)—H'FF90 120
6.2.5 Timer Control/Status Register (TCSR)—H'FF91 122
6.2.6 Timer Control Register (TCR)—H'FF96 125
6.2.7 Timer Output Compare Control Register (TOCR)—H'FF97 127
6.3 CPU Interface 128
6.4 Operation 130
6.4.1 FRC Incrementation Timing 130
6.4.2 Output Compare Timing 132
6.4.3 Input Capture Timing 133
6.4.4 Setting of FRC Overflow Flag (OVF) 136
6.5 Interrupts 137
6.6 Sample Application 137
6.7 Application Notes 138

Section 7. 8-Bit Timers 143
7.1 Overview 143
7.1.1 Features 143
7.1.2 Block Diagram 143
7.1.3 Input and Output Pins 144
7.1.4 Register Configuration 145
7.2 Register Descriptions 145
7.2.1 Timer Counter (TCNT)—H'FFCC (TMR0), H'FFD4 (TMR1) 145
7.2.2 Time Constant Registers A and B (TCORA and TCORB)—
H'FFCA and H'FFCB (TMR0), H'FFD2 and H'FFD3 (TMR1) 146
7.2.3 Timer Control Register (TCR)—H'FFC8 (TMR0), H'FFD0 (TMR1) 146
7.2.4 Timer Control/Status Register (TCSR)—H'FFC9 (TMR0), H'FFD1 (TMR1) 149
7.2.5 Serial/Timer Control Register (STCR)—H'FFC3 151
7.3 Operation 152
7.3.1 TCNT Incrementation Timing 152
7.3.2 Compare Match Timing 153

7.3.3 External Reset of TCNT 155
7.3.4 Setting of TCSR Overflow Flag (OVF) 156
7.4 Interrupts 157
7.5 Sample Application 157
7.6 Application Notes 158

Section 8. Serial Communication Interface 163
8.1 Overview 163
8.1.1 Features 163
8.1.2 Block Diagram 164
8.1.3 Input and Output Pins 164
8.1.4 Register Configuration 165
8.2 Register Descriptions 166
8.2.1 Receive Shift Register (RSR) 166
8.2.2 Receive Data Register (RDR)—H'FFDD 166
8.2.3 Transmit Shift Register (TSR) 166
8.2.4 Transmit Data Register (TDR)—H'FFDB 167
8.2.5 Serial Mode Register (SMR)—H'FFD8 167
8.2.6 Serial Control Register (SCR)—H'FFDA 170
8.2.7 Serial Status Register (SSR)—H'FFDC 174
8.2.8 Bit Rate Register (BRR)—H'FFD9 177
8.2.9 Serial/Timer Control Register (STCR)—H'FFC3 181
8.3 Operation 182
8.3.1 Overview 182
8.3.2 Asynchronous Mode 184
8.3.3 Clocked Synchronous Operation 197
8.4 SCI Interrupts 206
8.5 Application Notes 206

Section 9. A/D Converter 209
9.1 Overview 209
9.1.1 Features 209
9.1.2 Block Diagram 210
9.1.3 Input Pins 211
9.1.4 Register Configuration 211
9.2 Register Descriptions 212
9.2.1 A/D Data Registers (ADDR)—H'FFE0 to H'FFE6 212
9.2.2 A/D Control/Status Register (ADCSR)—H'FFE8 212

9.2.3 A/D Control Register (ADCR)—H'FFEA 215
9.3 Operation 215
9.3.1 Single Mode (SCAN = 0) 216
9.3.2 Scan Mode (SCAN = 1) 219
9.3.3 Input Sampling Time and A/D Conversion Time 222
9.3.4 External Trigger Input Timing 223
9.4 Interrupts 224

Section 10. RAM 225
10.1 Overview 225
10.2 Block Diagram 225
10.3 RAM Enable Bit (RAME) in System Control Register (SYSCR) 225
10.4 Operation 226
10.4.1 Expanded Modes (Modes 1 and 2) 226
10.4.2 Single-Chip Mode (Mode 3) 226

Section 11. ROM 227
11.1 Overview 227
11.1.1 Block Diagram 228
11.2 PROM Mode (H8/329, H8/327) 228
11.2.1 PROM Mode Setup 228
11.2.2 Socket Adapter Pin Assignments and Memory Map 229
11.3 Programming 232
11.3.1 Writing and Verifying 232
11.3.2 Notes on Writing 236
11.3.3 Reliability of Written Data 236
11.3.4 Erasing of Data 237
11.4 Handling of Windowed Packages 238

Section 12. Power-Down State 239
12.1 Overview 239
12.2 System Control Register: Power-Down Control Bits 240
12.3 Sleep Mode 241
12.3.1 Transition to Sleep Mode 242
12.3.2 Exit from Sleep Mode 242
12.4 Software Standby Mode 242
12.4.1 Transition to Software Standby Mode 243
12.4.2 Exit from Software Standby Mode 243

12.4.3 Sample Application of Software Standby Mode 243
12.4.4 Application Note 244
12.5 Hardware Standby Mode 245
12.5.1 Transition to Hardware Standby Mode 245
12.5.2 Recovery from Hardware Standby Mode 245
12.5.3 Timing Relationships 246

Section 13. Clock Pulse Generator 247
13.1 Overview 247
13.1.1 Block Diagram 247
13.2 Oscillator Circuit 247
13.3 System Clock Divider 250

Section 14. Electrical Specifications 251
14.1 Absolute Maximum Ratings 251
14.2 Electrical Characteristics 251
14.2.1 DC Characteristics 251
14.2.2 AC Characteristics 257
14.2.3 A/D Converter Characteristics 261
14.3 MCU Operational Timing 262
14.3.1 Bus Timing 262
14.3.2 Control Signal Timing 263
14.3.3 16-Bit Free-Running Timer Timing 266
14.3.4 8-Bit Timer Timing 267
14.3.5 Serial Communication Interface Timing 268
14.3.6 I/O Port Timing 269

Appendices

Appendix A. CPU Instruction Set 271
A.1 Instruction Set List 271
A.2 Operation Code Map 278
A.3 Number of States Required for Execution 280

Appendix B. Register Field 286
B.1 Register Addresses and Bit Names 286
B.2 Register Descriptions 290

Appendix C. Pin States 317
C.1 Pin States in Each Mode 317
Appendix D. Timing of Transition to and Recovery from Hardware Standby Mode 319

Appendix E. Package Dimensions 320

Section 1. Overview

1.1 Overview

The H8/329 Series of single-chip microcomputers features an H8/300 CPU core and a complement of on-chip supporting modules implementing a variety of system functions.

The H8/300 CPU is a high-speed processor with an architecture featuring powerful bit-manipulation instructions, ideally suited for realtime control applications. The on-chip supporting modules implement peripheral functions needed in system configurations. These include ROM, RAM, two types of timers (a 16-bit free-running timer and 8-bit timers), a serial communication interface (SCI), an A/D converter, and I/O ports.

The H8/329 Series can operate in a single-chip mode or in two expanded modes, depending on the requirements of the application. (The operating mode will be referred to as the MCU mode in this manual.)

The entire H8/329 Series is available with masked ROM. The H8/329 and H8/327 are also available in ZTAT™ versions* that can be programmed at the user site, and in ROMless versions.

Notes: * ZTAT is a registered trademark of Hitachi, Ltd.

Table 1-1 lists the features of the H8/329 Series.

Table 1-1. Features

Item	Specification
CPU	Two-way general register configuration • Eight 16-bit registers, or • Sixteen 8-bit registers High-speed operation • Maximum clock rate: 10MHz • Add/subtract: 0.2µs • Multiply/divide: 1.4µs Streamlined, concise instruction set • Instruction length: 2 or 4 bytes • Register-register arithmetic and logic operations • MOV instruction for data transfer between registers and memory Instruction set features • Multiply instruction (8 bits × 8 bits) • Divide instruction (16 bits ÷ 8 bits) • Bit-accumulator instructions • Register-indirect specification of bit positions
Memory	• H8/329: 32k-byte ROM; 1k-byte RAM • H8/328: 24k-byte ROM; 1k-byte RAM • H8/327: 16k-byte ROM; 512-byte RAM • H8/326: 8k-byte ROM; 256-byte RAM
16-bit free-running timer (1 channel)	• One 16-bit free-running counter (can also count external events) • Two output-compare lines • Four input capture lines (can be buffered)
8-bit timer (2 channels)	Each channel has • One 8-bit up-counter (can also count external events) • Two time constant registers
Serial communication interface (SCI) (1 channel)	• Asynchronous or clocked synchronous mode (selectable) • Full duplex: can transmit and receive simultaneously • On-chip baud rate generator

Table 1-1. Features (cont.)

Item	Specification
A/D converter	• 8-bit resolution • Eight channels: single or scan mode (selectable) • Start of A/D conversion can be externally triggered • Sample-and-hold function
I/O ports	• 43 input/output lines (16 of which can drive LEDs) • 8 input-only lines
Interrupts	• Four external interrupt lines: $\overline{NMI}$, $\overline{IRQ_0}$, $\overline{IRQ_1}$, $\overline{IRQ_2}$ • 18 on-chip interrupt sources
Operating modes	• Expanded mode with on-chip ROM disabled (mode 1) • Expanded mode with on-chip ROM enabled (mode 2) • Single-chip mode (mode 3)
Power-down modes	• Sleep mode • Software standby mode • Hardware standby mode
Other features	• On-chip oscillator

Table 1-1. Features (cont.)

Item	Specification				
Series lineup					
		5-V version	**3-V version**	**Package**	**ROM**
	H8/329	HD6473298C	HD6473298VC	64-pin windowed shrink DIP (DC-64S)	PROM
		HD6473298P	HD6473298VP	64-pin shrink DIP (DP-64S)	
		HD6473298F	HD6473298VF	64-pin QFP (FP-64A)	
		HD6473298CP	HD6473298VCP	68-pin PLCC (CP-68)	
		HD6433298P	HD6433298VP	64-pin shrink DIP (DP-64S)	Masked ROM
		HD6433298F	HD6433298VF	64-pin QFP (FP-64A)	
		HD6433298CP	HD6433298VCP	68-pin PLCC (CP-68)	
		HD6413298P	HD6413298VP	64-pin shrink DIP (DP-64S)	ROMless
		HD6413298F	HD6413298VF	64-pin QFP (FP-64A)	
		HD6413298CP	HD6413298VCP	68-pin PLCC (CP-68)	
	H8/328	HD6433288P	HD6433288VP	64-pin shrink DIP (DP-64S)	Masked ROM
		HD6433288F	HD6433288VF	64-pin QFP (FP-64A)	
		HD6433288CP	HD6433288VCP	68-pin PLCC (CP-68)	
	H8/327	HD6473278C	HD6473278VC	64-pin windowed shrink DIP (DC-64S)	PROM
		HD6473278P	HD6473278VP	64-pin shrink DIP (DP-64S)	
		HD6473278F	HD6473278VF	64-pin QFP (FP-64A)	
		HD6473278CP	HD6473278VCP	68-pin PLCC (CP-68)	
		HD6433278P	HD6433278VP	64-pin shrink DIP (DP-64S)	Masked ROM
		HD6433278F	HD6433278VF	64-pin QFP (FP-64A)	
		HD6433278CP	HD6433278VCP	68-pin PLCC (CP-68)	
		HD6413278P	HD6413278VP	64-pin shrink DIP (DP-64S)	ROMless
		HD6413278F	HD6413278VF	64-pin QFP (FP-64A)	
		HD6413278CP	HD6413278VCP	68-pin PLCC (CP-68)	
	H8/326	HD6433268P	HD6433268VP	64-pin shrink DIP (DP-64S)	Masked ROM
		HD6433268F	HD6433268VF	64-pin QFP (FP-64A)	
		HD6433268CP	HD6433268VCP	68-pin PLCC (CP-68)	

1.2 Block Diagram

Figure 1-1 shows a block diagram of the H8/329 Series.

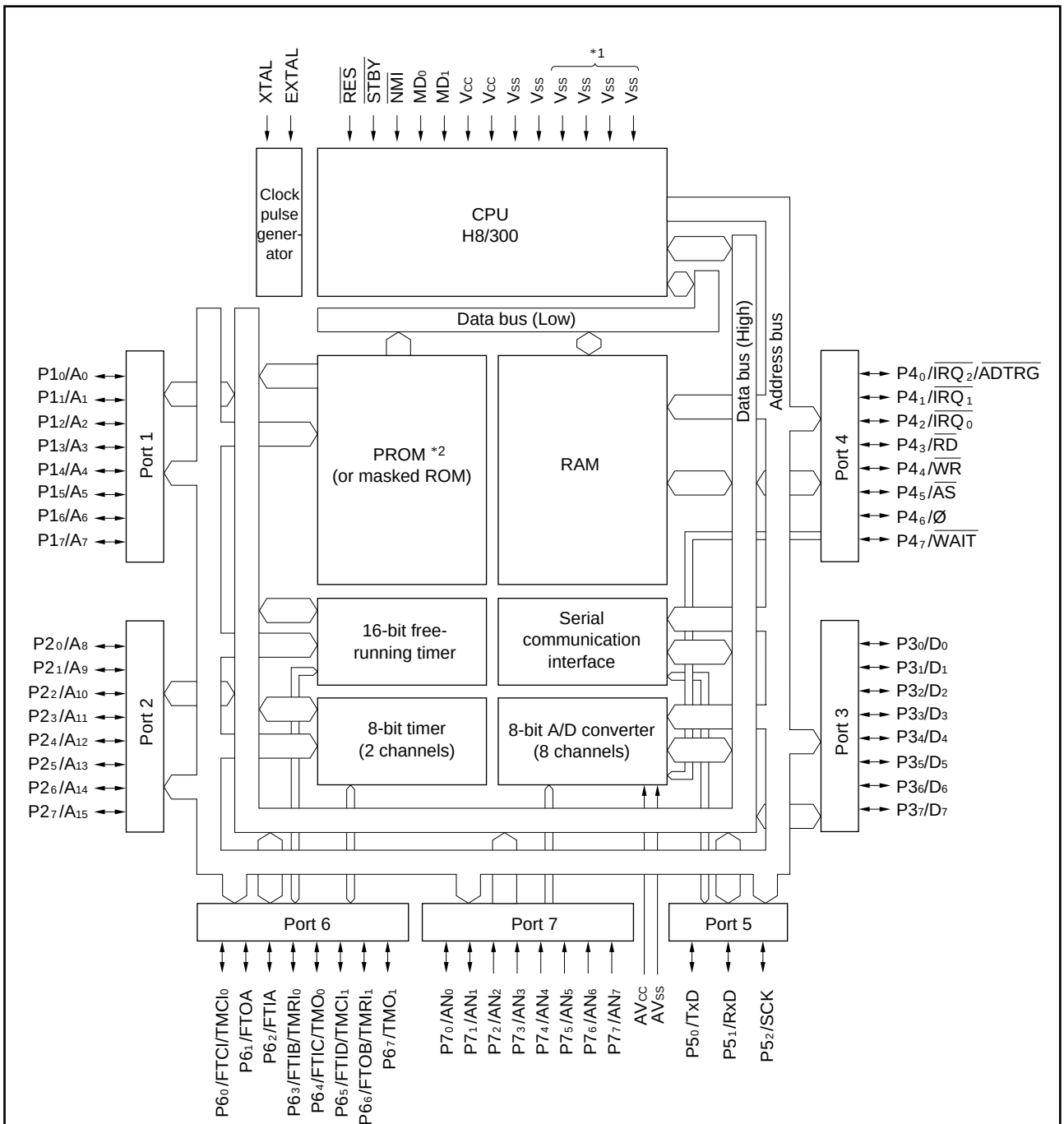

Notes: *1 CP-68 package only.
*2 PROM is available only in the H8/329 and H8/327.

Memory Sizes

	H8/329	H8/328	H8/327	H8/326
ROM	32k bytes	24k bytes	16k bytes	8k bytes
RAM	1k byte	1k byte	512 bytes	256 bytes

Figure 1-1. Block Diagram

1.3 Pin Assignments and Functions

1.3.1 Pin Arrangement

Figure 1-2 shows the pin arrangement of the DC-64S and DP-64S packages. Figure 1-3 shows the pin arrangement of the FP-64A package. Figure 1-4 shows the pin arrangement of the CP-68 package.

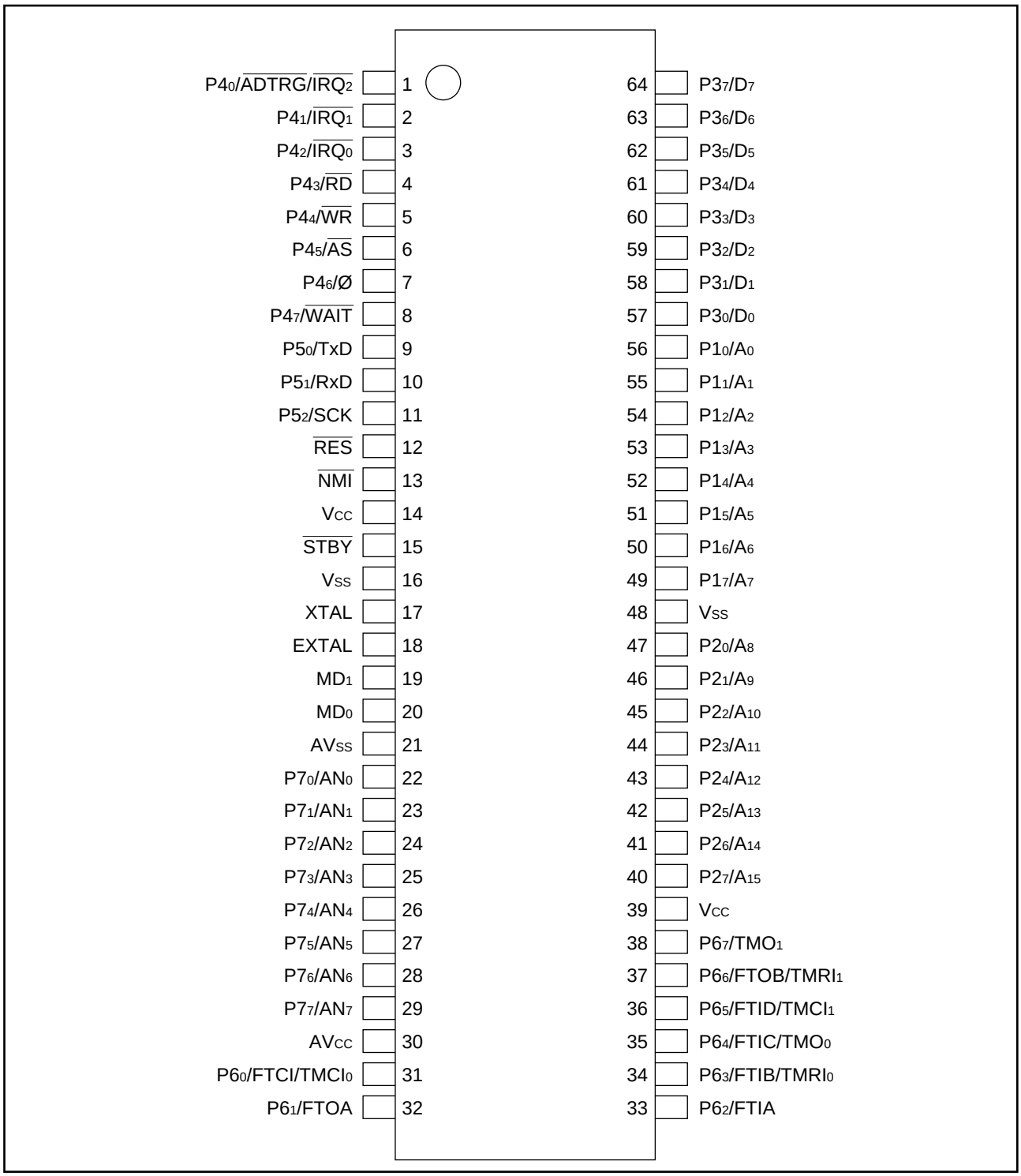

Figure 1-2. Pin Arrangement (DC-64S and DP-64S, Top View)

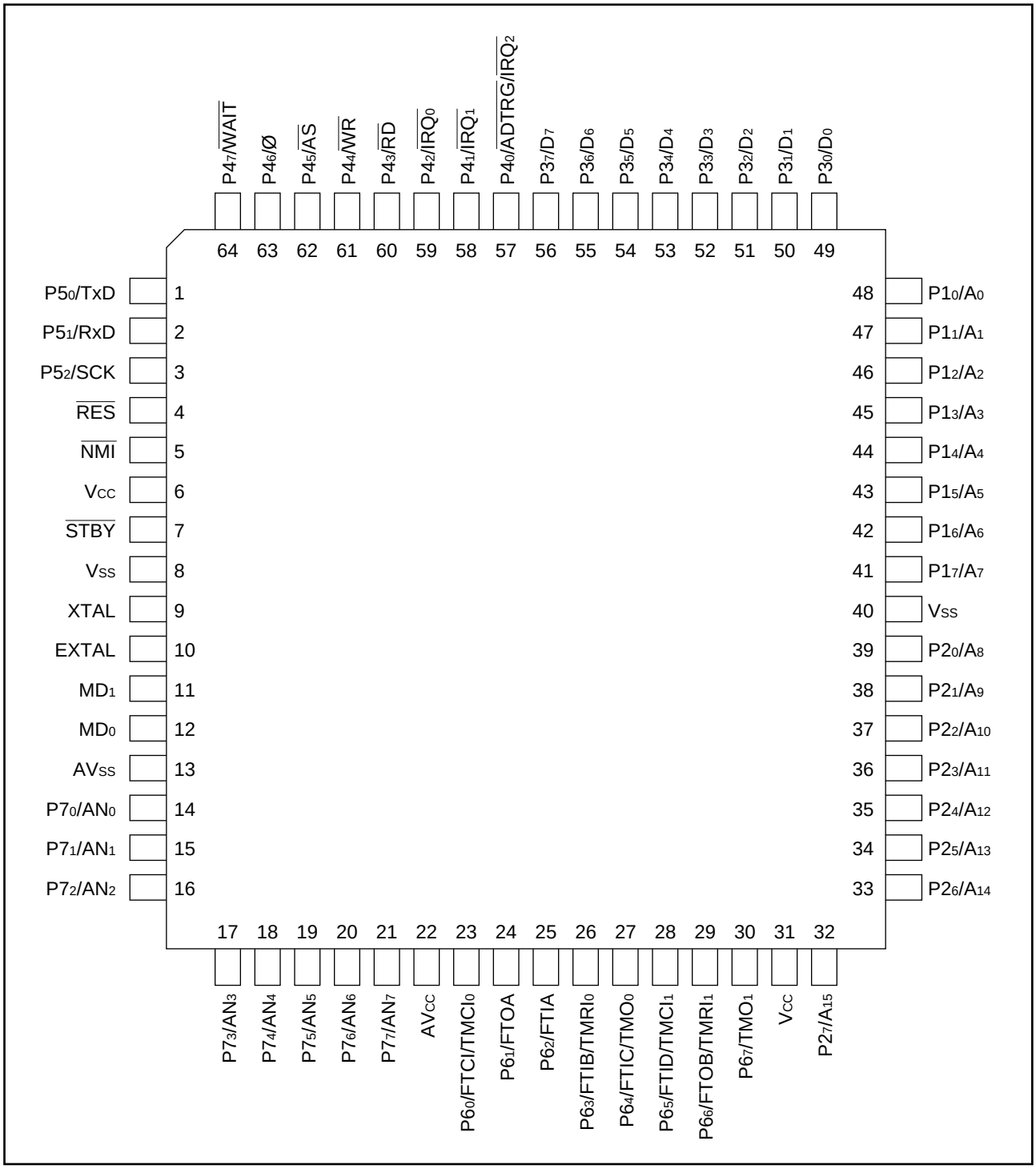

Figure 1-3. Pin Arrangement (FP-64A, Top View)

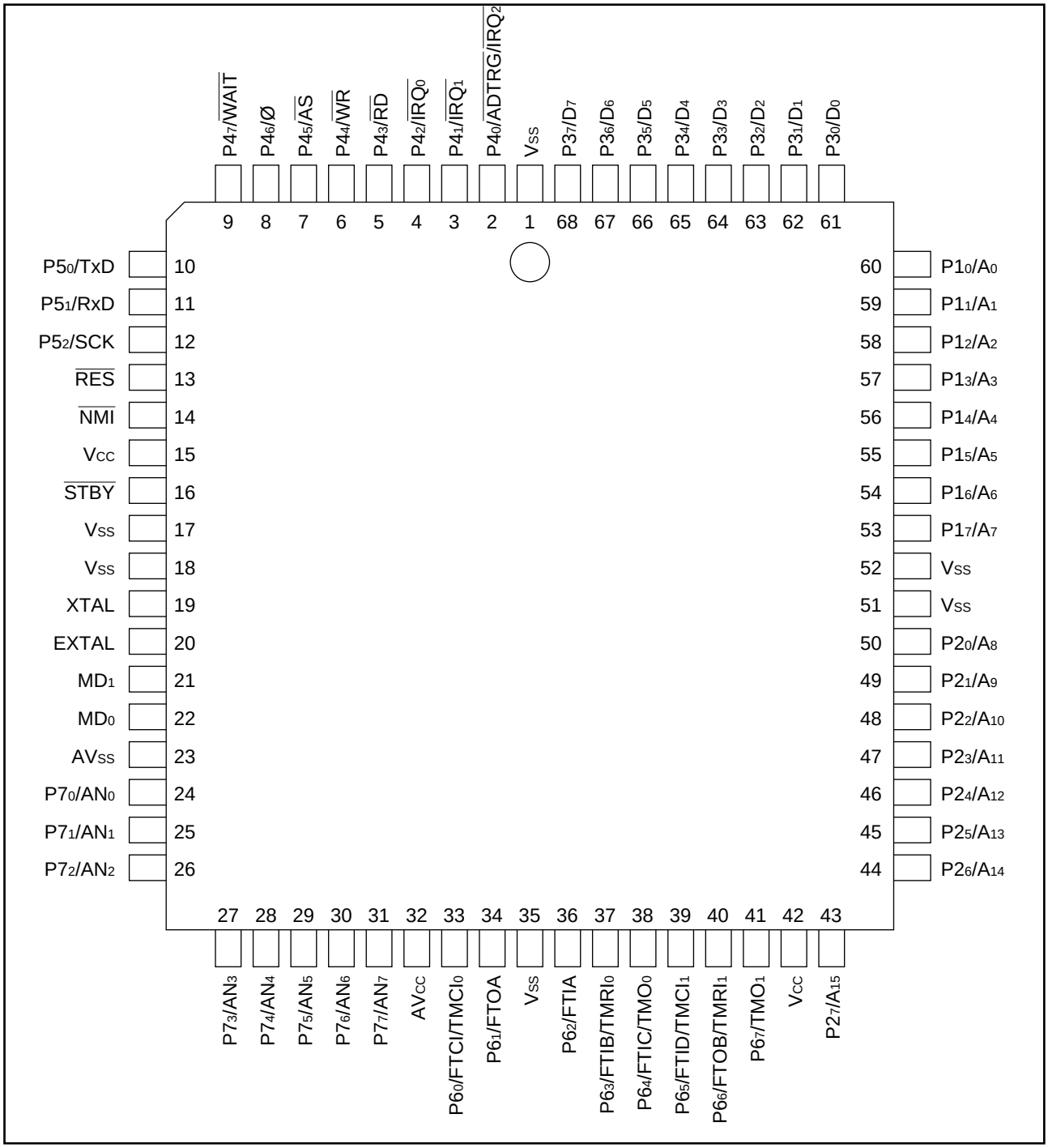

Figure 1-4. Pin Arrangement (CP-68, Top View)

1.3.2 Pin Functions

(1) Pin Assignments in Each Operating Mode: Table 1-2 lists the assignments of the pins of the DC-64S, DP-64S, FP-64A, and CP-68 packages in each operating mode.

Table 1-2. Pin Assignments in Each Operating Mode (1)

Pin No.			Expanded modes		Single-chip mode	PROM
DC-64S						
DP-64S	FP-64A	CP-68	Mode 1	Mode 2	Mode 3	mode
—	—	1	V_{SS}	V_{SS}	V_{SS}	V_{SS}
1	57	2	$P4_0/\overline{IRQ_2}/\overline{ADTRG}$	$P4_0/\overline{IRQ_2}/\overline{ADTRG}$	$P4_0/\overline{IRQ_2}/\overline{ADTRG}$	NC
2	58	3	$P4_1/\overline{IRQ_1}$	$P4_1/\overline{IRQ_1}$	$P4_1/\overline{IRQ_1}$	NC
3	59	4	$P4_2/\overline{IRQ_0}$	$P4_2/\overline{IRQ_0}$	$P4_2/\overline{IRQ_0}$	NC
4	60	5	$\overline{RD}$	$\overline{RD}$	$P4_3$	NC
5	61	6	$\overline{WR}$	$\overline{WR}$	$P4_4$	NC
6	62	7	$\overline{AS}$	$\overline{AS}$	$P4_5$	NC
7	63	8	Ø	Ø	$P4_6$/Ø	NC
8	64	9	$\overline{WAIT}$	$\overline{WAIT}$	$P4_7$	NC
9	1	10	$P5_0$/TxD	$P5_0$/TxD	$P5_0$/TxD	NC
10	2	11	$P5_1$/RxD	$P5_1$/RxD	$P5_1$/RxD	NC
11	3	12	$P5_2$/SCK	$P5_2$/SCK	$P5_2$/SCK	NC
12	4	13	$\overline{RES}$	$\overline{RES}$	$\overline{RES}$	V_{PP}
13	5	14	$\overline{NMI}$	$\overline{NMI}$	$\overline{NMI}$	EA_9
14	6	15	V_{CC}	V_{CC}	V_{CC}	V_{CC}
15	7	16	$\overline{STBY}$	$\overline{STBY}$	$\overline{STBY}$	V_{SS}
16	8	17	V_{SS}	V_{SS}	V_{SS}	V_{SS}
—	—	18	V_{SS}	V_{SS}	V_{SS}	V_{SS}
17	9	19	XTAL	XTAL	XTAL	NC
18	10	20	EXTAL	EXTAL	EXTAL	NC
19	11	21	MD_1	MD_1	MD_1	V_{SS}
20	12	22	MD_0	MD_0	MD_0	V_{SS}
21	13	23	AV_{SS}	AV_{SS}	AV_{SS}	V_{SS}
22	14	24	$P7_0/AN_0$	$P7_0/AN_0$	$P7_0/AN_0$	NC
23	15	25	$P7_1/AN_1$	$P7_1/AN_1$	$P7_1/AN_1$	NC
24	16	26	$P7_2/AN_2$	$P7_2/AN_2$	$P7_2/AN_2$	NC
25	17	27	$P7_3/AN_3$	$P7_3/AN_3$	$P7_3/AN_3$	NC
26	18	28	$P7_4/AN_4$	$P7_4/AN_4$	$P7_4/AN_4$	NC
27	19	29	$P7_5/AN_5$	$P7_5/AN_5$	$P7_5/AN_5$	NC
28	20	30	$P7_6/AN_6$	$P7_6/AN_6$	$P7_6/AN_6$	NC
29	21	31	$P7_7/AN_7$	$P7_7/AN_7$	$P7_7/AN_7$	NC

Notes: 1. Pins marked NC should be left unconnected.

2. For details on PROM mode, refer to 11.2, “PROM Mode.”

Table 1-2. Pin Assignments in Each Operating Mode (2)

Pin No.			Expanded modes		Single-chip mode	PROM
DC-64S						
DP-64S	FP-64A	CP-68	Mode 1	Mode 2	Mode 3	mode
30	22	32	AV_{CC}	AV_{CC}	AV_{CC}	V_{CC}
31	23	33	$P6_0$/FTCI/$TMCI_0$	$P6_0$/FTCI/$TMCI_0$	$P6_0$/FTCI/$TMCI_0$	NC
32	24	34	$P6_1$/FTOA	$P6_1$/FTOA	$P6_1$/FTOA	NC
—	—	35	V_{SS}	V_{SS}	V_{SS}	V_{SS}
33	25	36	$P6_2$/FTIA	$P6_2$/FTIA	$P6_2$/FTIA	NC
34	26	37	$P6_3$/FTIB/$TMRI_0$	$P6_3$/FTIB/$TMRI_0$	$P6_3$/FTIB/$TMRI_0$	V_{CC}
35	27	38	$P6_4$/FTIC/TMO_0	$P6_4$/FTIC/TMO_0	$P6_4$/FTIC/TMO_0	V_{CC}
36	28	39	$P6_5$/FTID/$TMCI_1$	$P6_5$/FTID/$TMCI_1$	$P6_5$/FTID/$TMCI_1$	NC
37	29	40	$P6_6$/FTOB/$TMRI_1$	$P6_6$/FTOB/$TMRI_1$	$P6_6$/FTOB/$TMRI_1$	NC
38	30	41	$P6_7$/TMO_1	$P6_7$/TMO_1	$P6_7$/TMO_1	NC
39	31	42	V_{CC}	V_{CC}	V_{CC}	V_{CC}
40	32	43	A_{15}	$A2_7/A_{15}$	$P2_7$	$\overline{CE}$
41	33	44	A_{14}	$P2_6/A_{14}$	$P2_6$	EA_{14}
42	34	45	A_{13}	$P2_5/A_{13}$	$P2_5$	EA_{13}
43	35	46	A_{12}	$P2_4/A_{12}$	$P2_4$	EA_{12}
44	36	47	A_{11}	$P2_3/A_{11}$	$P2_3$	EA_{11}
45	37	48	A_{10}	$P2_2/A_{10}$	$P2_2$	EA_{10}
46	38	49	A_9	$P2_1/A_9$	$P2_1$	$\overline{OE}$
47	39	50	A_8	$P2_0/A_8$	$P2_0$	EA_8
48	40	51	V_{SS}	V_{SS}	V_{SS}	V_{SS}
—	—	52	V_{SS}	V_{SS}	V_{SS}	V_{SS}
49	41	53	A_7	$P1_7/A_7$	$P1_7$	EA_7
50	42	54	A_6	$P1_6/A_6$	$P1_6$	EA_6
51	43	55	A_5	$P1_5/A_5$	$P1_5$	EA_5
52	44	56	A_4	$P1_4/A_4$	$P1_4$	EA_4
53	45	57	A_3	$P1_3/A_3$	$P1_3$	EA_3
54	46	58	A_2	$P1_2/A_2$	$P1_2$	EA_2
55	47	59	A_1	$P1_1/A_1$	$P1_1$	EA_1
56	48	60	A_0	$P1_0/A_0$	$P1_0$	EA_0
57	49	61	D_0	D_0	$P3_0$	EO_0
58	50	62	D_1	D_1	$P3_1$	EO_1
59	51	63	D_2	D_2	$P3_2$	EO_2
60	52	64	D_3	D_3	$P3_3$	EO_3
61	53	65	D_4	D_4	$P3_4$	EO_4
62	54	66	D_5	D_5	$P3_5$	EO_5
63	55	67	D_6	D_6	$P3_6$	EO_6
64	56	68	D_7	D_7	$P3_7$	EO_7

Notes: 1. Pins marked NC should be left unconnected.

2. For details on PROM mode, refer to 11.2, “PROM Mode.”

(2) Pin Functions: Table 1-3 gives a concise description of the function of each pin.

Table 1-3. Pin Functions (1)

Type	Symbol	Pin No. DC-64S DP-64S	Pin No. FP-64A	Pin No. CP-68	I/O	Name and function
Power	V_{CC}	14, 39	6, 31	15, 42	I	**Power:** Connected to the power supply (+5V). Connect both V_{CC} pins to the system power supply (+5V).
	V_{SS}	16, 48	8, 40	1, 17, 18, 35, 51, 52	I	**Ground:** Connected to ground (0V). Connect all VSS pins to the system power supply (0V).
Clock	XTAL	17	9	19	I	**Crystal:** Connected to a crystal oscillator. The crystal frequency should be double the desired system clock frequency. If an external clock is input at the EXTAL pin, a reverse-phase clock should be input at the XTAL pin.
	EXTAL	18	10	20	I	**External crystal:** Connected to a crystal oscillator or external clock. The frequency of the external clock should be double the desired system clock frequency. See section 13.2, “Oscillator Circuit” for examples of connections to a crystal and external clock.
	Ø	7	63	8	O	**System clock:** Supplies the system clock to peripheral devices.
System control	$\overline{RES}$	12	4	13	I	**Reset:** A Low input causes the chip to reset.
	$\overline{STBY}$	15	7	16	I	**Standby:** A transition to the hardware standby mode (a power-down state) occurs when a Low input is received at the $\overline{STBY}$ pin.
Address bus	A_{15} to A_0	40 to 47, 49 to 56	32 to 39, 41 to 48	43 to 50, 53 to 60	O	**Address bus:** Address output pins.

Table 1-3. Pin Functions (2)

Type	Symbol	Pin No. DC-64S DP-64S	Pin No. FP-64A	Pin No. CP-68	I/O	Name and function
Data bus	D_7 to D_0	57 to 64	49 to 56	61 to 68	I/O	Data bus: 8-Bit bidirectional data bus.
Bus control	$\overline{WAIT}$	8	64	9	I	**Wait:** Requests the CPU to insert Tw states into the bus cycle when an external address is accessed.
	$\overline{RD}$	4	60	5	O	**Read:** Goes Low to indicate that the CPU is reading an external address.
	$\overline{WR}$	5	61	6	O	**Write:** Goes Low to indicate that the CPU is writing to an external address.
	$\overline{AS}$	6	62	7	O	**Address Strobe:** Goes Low to indicate that there is a valid address on the address bus.
Interrupt signals	$\overline{NMI}$	13	5	14	I	**NonMaskable Interrupt:** Highest-priority interrupt request. The NMIEG bit in the system control register (SYSCR) determines whether the interrupt is requested on the rising or falling edge of the NMI input.
	$\overline{IRQ_0}$ to $\overline{IRQ_2}$	1 to 3	57 to 59	2 to 4	I	**Interrupt Request 0 to 2:** Maskable interrupt request pins.
Operating mode control	MD_1, MD_0	19, 20	11, 12	21, 22	I	**Mode:** Input pins for setting the MCU operating mode according to the table below.

MD_1	MD_0	Mode	Description
0	1	Mode 1	Expanded mode with on-chip ROM disabled
1	0	Mode 2	Expanded mode with on-chip ROM enabled
1	1	Mode 3	Single-chip mode

Table 1-3. Pin Functions (3)

Type	Symbol	Pin No. DC-64S DP-64S	FP-64A	CP-68	I/O	Name and function
Serial communication interface	TxD	9	1	10	O	**Transmit Data:** Data output pin for the serial communication interface.
	RxD	10	2	11	I	**Receive Data:** Data input pin for the serial communication interface.
	SCK	11	3	12	I/O	**Serial ClocK:** Input/output pin for the serial clock.
16-bit free-running timer	FTOA, FTOB	32, 37	24, 29	34, 40	O	**FRT Output compare A and B:** Output pins controlled by comparators A and B of the free-running timer.
	FTCI	31	23	33	I	**FRT counter Clock Input:** Input pin for an external clock signal for the free-running timer.
	FTIA to FTID	33 to 36	25 to 28	36 to 39	I	**FRT Input capture A to D:** Input capture pins for the free-running timer.
8-bit timer	TMO_0, TMO_1	35, 38	27, 30	38, 41	O	**8-bit TiMer Output:** Compare-match output pins for the 8-bit timers.
	$TMCI_0$, $TMCI_1$	31, 36	23, 28	33, 39	I	**8-bit TiMer counter Clock Input:** External clock input pins for the 8-bit timer counters.
	$TMRI_0$, $TMRI_1$	34, 37	26, 29	37, 40	I	**8-bit TiMer counter Reset Input:** A High input at these pins resets the 8-bit timer counters.
A/D converter	AN_7 to AN_0	22 to 29	14 to 21	24 to 31	I	**ANalog input:** Analog signal input pins for the A/D converter.
	$\overline{ADTRG}$	1	57	2	I	**A/D Trigger:** External trigger input for starting the A/D converter.
	AV_{CC}	30	22	32	I	**Analog reference Voltage:** Reference voltage pin for the A/D converter. If the A/D converter is not used, connect AV_{CC} to the system power supply (+5V).
	AV_{SS}	21	13	23	I	**Analog ground:** Ground pin for the A/D converter.

Table 1-3. Pin Functions (4)

Type	Symbol	Pin No. DC-64S DP-64S	Pin No. FP-64A	Pin No. CP-68	I/O	Name and function
General-purpose I/O	$P1_7$ to $P1_0$	49 to 56	41 to 48	53 to 60	I/O	**Port 1:** An 8-bit input/output port with programmable MOS input pull-ups and LED driving capability. The direction of each bit can be selected in the port 1 data direction register (P1DDR).
	$P2_7$ to $P2_0$	40 to 47	32 to 39	43 to 50	I/O	**Port 2:** An 8-bit input/output port with programmable MOS input pull-ups and LED driving capability. The direction of each bit can be selected in the port 2 data direction register (P2DDR).
	$P3_7$ to $P3_0$	57 to 64	49 to 56	61 to 68	I/O	**Port 3:** An 8-bit input/output port with programmable MOS input pull-ups. The direction of each bit can be selected in the port 3 data direction register (P3DDR).
	$P4_7$ to $P4_0$	1 to 8	57 to 64	2 to 9	I/O	**Port 4:** An 8-bit input/output port. The direction of each bit can be selected in the port 4 data direction register (P4DDR).
	$P5_2$ to $P5_0$	9 to 11	1 to 3	10 to 12	I/O	**Port 5:** A 3-bit input/output port. The direction of each bit can be selected in the port 5 data direction register (P5DDR).
	$P6_7$ to $P6_0$	31 to 38	23 to 30	33, 34, 36 to 41	I/O	**Port 6:** An 8-bit input/output port. The direction of each bit can be selected in the port 6 data direction register (P6DDR).
	$P7_7$ to $P7_0$	22 to 29	14 to 21	24 to 31	I	**Port 7:** An 8-bit input port.

Section 2. MCU Operating Modes and Address Space

2.1 Overview

2.1.1 Mode Selection

The H8/329 Series operates in three modes numbered 1, 2, and 3. The mode is selected by the inputs at the mode pins (MD_1 and MD_0) when the chip comes out of a reset. See table 2-1.
The ROMless versions (HD6413298 and HD6413278) can be used only in mode 1 (expanded mode with on-chip ROM disabled.)

Table 2-1. Operating Modes

Mode	MD_1	MD_0	Address space	On-chip ROM	On-chip RAM
Mode 0	Low	Low	—	—	—
Mode 1	Low	High	Expanded	Disabled	Enabled*
Mode 2	High	Low	Expanded	Enabled	Enabled*
Mode 3	High	High	Single-chip	Enabled	Enabled

Note: * If the RAME bit in the system control register (SYSCR) is cleared to 0, off-chip memory can be accessed instead.

Modes 1 and 2 are expanded modes that permit access to off-chip memory and peripheral devices. The maximum address space supported by these externally expanded modes is 64K bytes.

In mode 3 (single-chip mode), only on-chip ROM and RAM and the on-chip register field are used. All ports are available for general-purpose input and output.

Mode 0 is inoperative in the H8/329 Series. Avoid setting the mode pins to mode 0.

2.1.2 Mode and System Control Registers (MDCR and SYSCR)

Table 2-2 lists the registers related to the operating mode: the system control register (SYSCR) and mode control register (MDCR). The mode control register indicates the inputs to the mode pins MD_1 and MD_0.

Table 2-2. Mode and System Control Registers

Name	Abbreviation	Read/Write	Address
System control register	SYSCR	R/W	H'FFC4
Mode control register	MDCR	R	H'FFC5

2.2 System Control Register (SYSCR)—H'FFC4

Bit	7	6	5	4	3	2	1	0
	SSBY	STS2	STS1	STS0	—	NMIEG	—	RAME
Initial value	0	0	0	0	1	0	1	1
Read/Write	R/W	R/W	R/W	R/W	—	R/W	—	R/W

The system control register (SYSCR) is an 8-bit register that controls the operation of the chip.

Bit 7—Software Standby (SSBY): Enables transition to the software standby mode. For details, see section 12, “Power-Down State.”

On recovery from software standby mode by an external interrupt, the SSBY bit remains set to “1.” It can be cleared by writing “0.”

Bit 7

SSBY	Description	
0	The SLEEP instruction causes a transition to sleep mode.	(Initial value)
1	The SLEEP instruction causes a transition to software standby mode.	

Bits 6 to 4—Standby Timer Select 2 to 0 (STS2 to STS0): These bits select the clock settling time when the chip recovers from the software standby mode by an external interrupt. During the selected time the CPU and on-chip supporting modules continue to stand by. These bits should be set according to the clock frequency so that the settling time is at least 10ms. For specific settings, see section 12.2, “System Control Register: Power-Down Control Bits.”

Bit 6 STS2	Bit 5 STS1	Bit 4 STS0	Description	
0	0	0	Settling time = 8192 states	(Initial value)
0	0	1	Settling time = 16384 states	
0	1	0	Settling time = 32768 states	
0	1	1	Settling time = 65536 states	
1	—	—	Settling time = 131072 states	

Bit 3—Reserved: This bit cannot be modified and is always read as “1.”

Bit 2—NMI Edge (NMIEG): Selects the valid edge of the $\overline{\text{NMI}}$ input.

Bit 2 NMIEG	Description	
0	An interrupt is requested on the falling edge of the $\overline{\text{NMI}}$ input.	(Initial value)
1	An interrupt is requested on the rising edge of the $\overline{\text{NMI}}$ input.	

Bit 1—Reserved: This bit cannot be modified and is always read as “1.”

Bit 0—RAM Enable (RAME): Enables or disables the on-chip RAM. The RAME bit is initialized by a reset, but is not initialized in the software standby mode.

Bit 0 RAME	Description	
0	The on-chip RAM is disabled.	
1	The on-chip RAM is enabled.	(Initial value)

2.3 Mode Control Register (MDCR)—H'FFC5

Bit	7	6	5	4	3	2	1	0
	—	—	—	—	—	—	MDS1	MDS0
Initial value	1	1	1	0	0	1	*	*
Read/Write	—	—	—	—	—	—	R	R

Note: * Initialized according to MD_1 and MD_0 inputs.

The mode control register (MDCR) is an eight-bit register that indicates the operating mode of the chip.

Bits 7 to 5—Reserved: These bits cannot be modified and are always read as “1.”

Bits 4 and 3—Reserved: These bits cannot be modified and are always read as “0.”

Bit 2—Reserved: This bit cannot be modified and is always read as “1.”

Bits 1 and 0—Mode Select 1 and 0 (MDS1 and MDS0): These bits indicate the values of the mode pins (MD_1 and MD_0), thus indicating the current operating mode of the chip. MDS1 corresponds to MD_1 and MDS0 to MD_0. These bits can be read but not written. When the mode control register is read, the levels at the mode pins (MD_1 and MD_0) are latched in these bits.

2.4 Address Space Maps

Figures 2-1 to 2-4 show memory maps of the H8/329, H8/328, H8/327, and H8/326 in modes 1, 2, and 3.

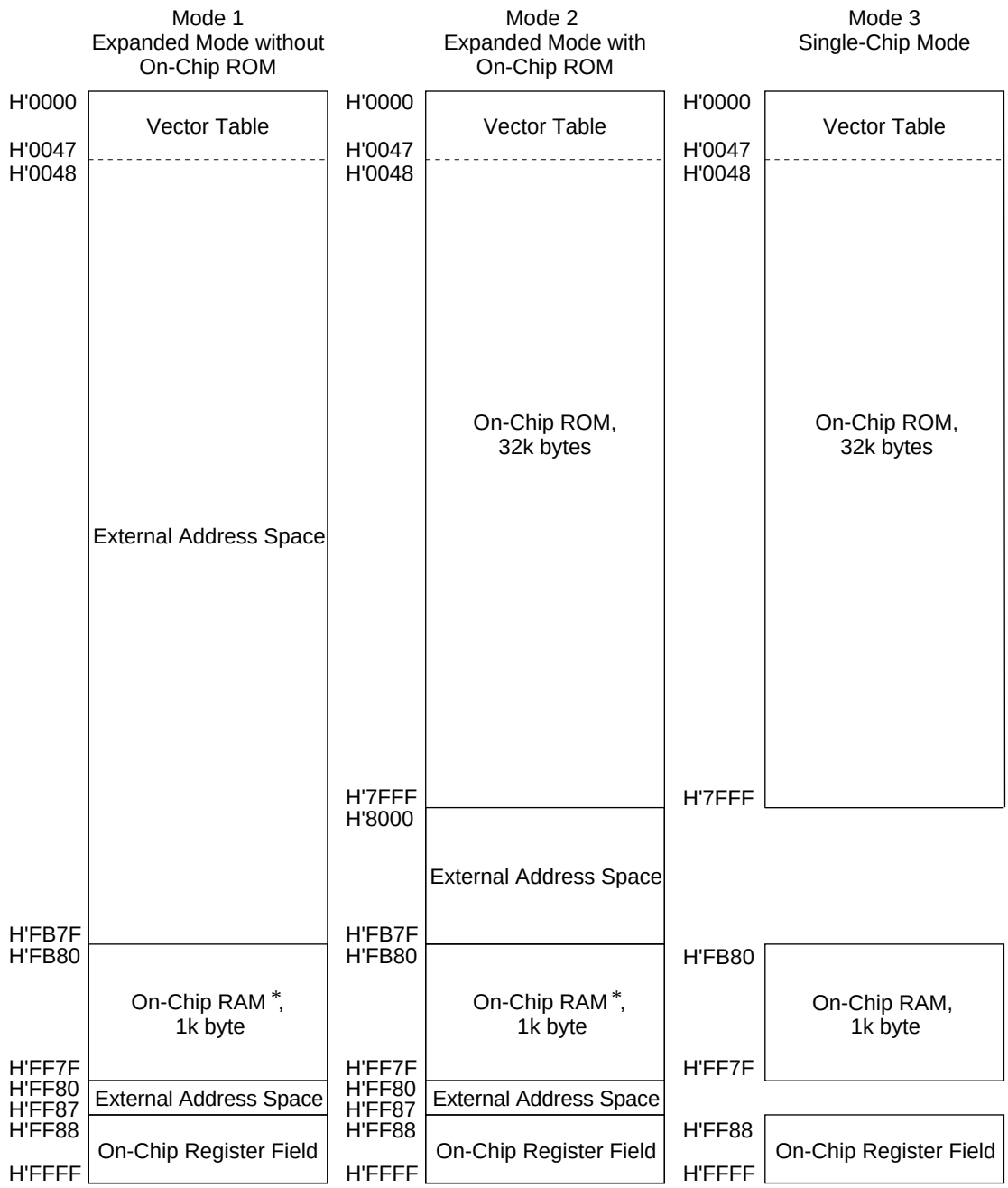

Note: * External memory can be accessed at these addresses when the RAME bit in the system control register (SYSCR) is cleared to 0.

Figure 2-1. H8/329 Address Space Map

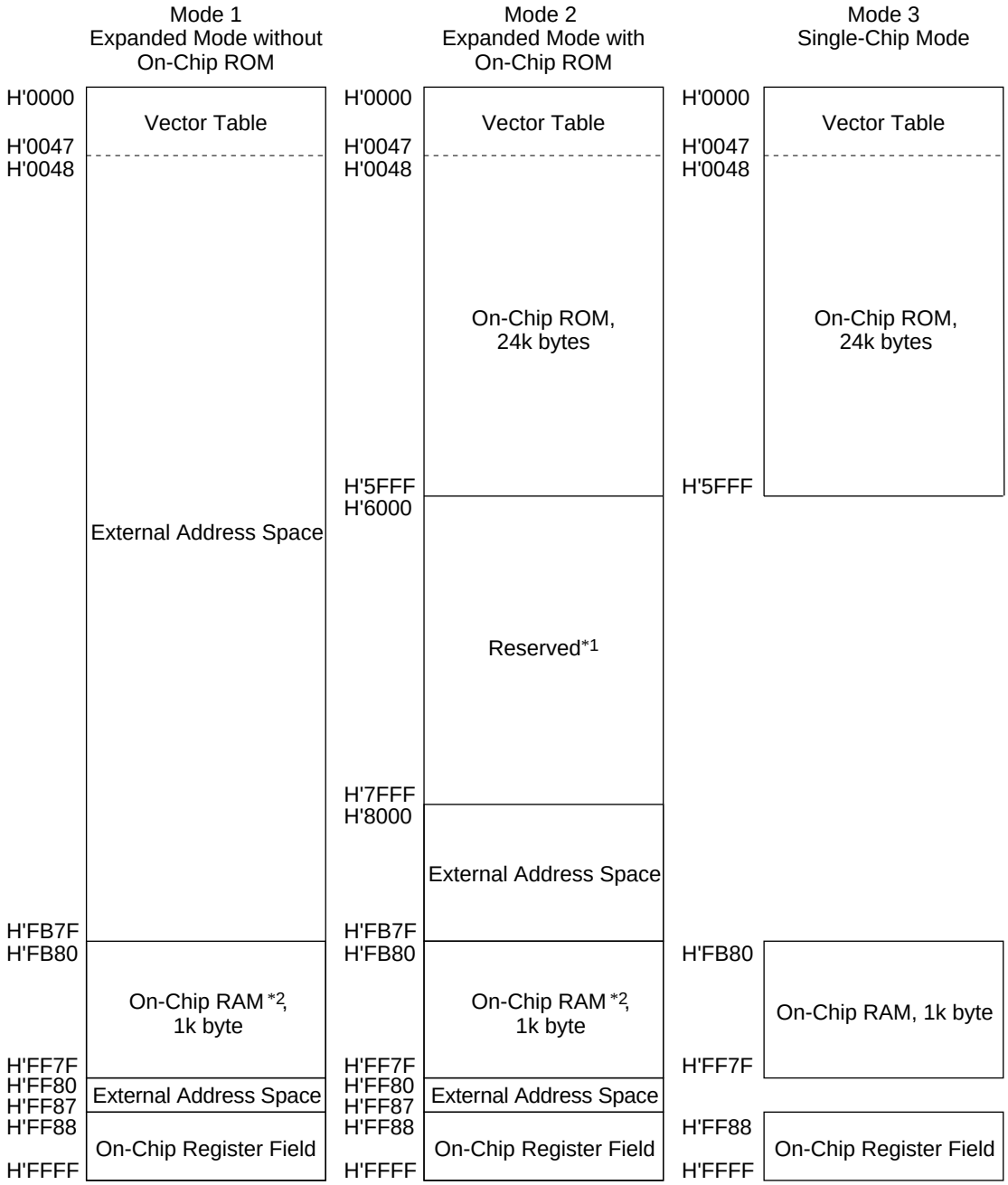

Notes: *1 Do not access these reserved areas.
*2 External memory can be accessed at these addresses when the RAME bit in the system control register (SYSCR) is cleared to 0.

Figure 2-2. H8/328 Address Space Map

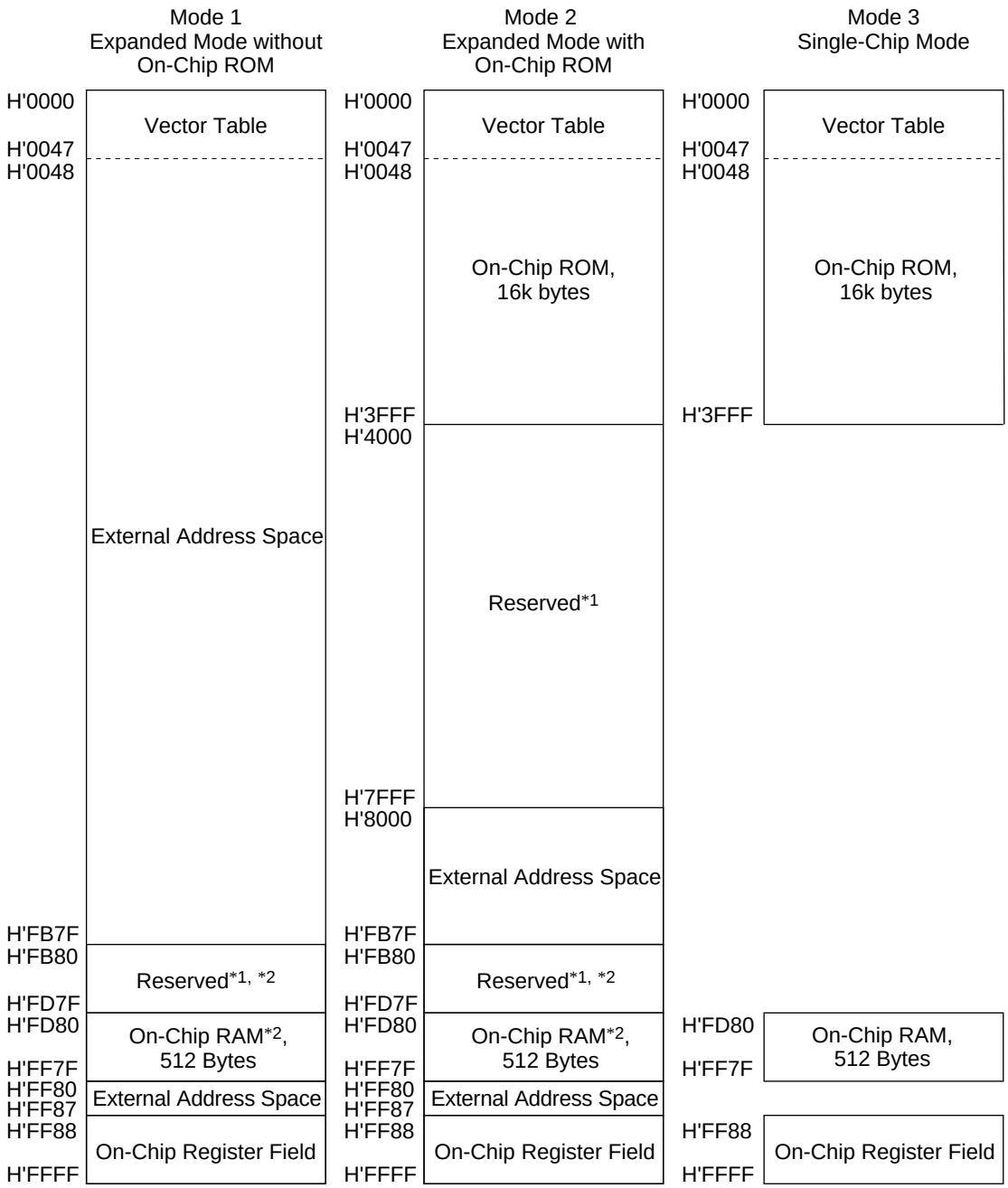

Notes: *1 Do not access these reserved areas.
*2 External memory can be accessed at these addresses when the RAME bit in the system control register (SYSCR) is cleared to 0.

Figure 2-3. H8/327 Address Space Map

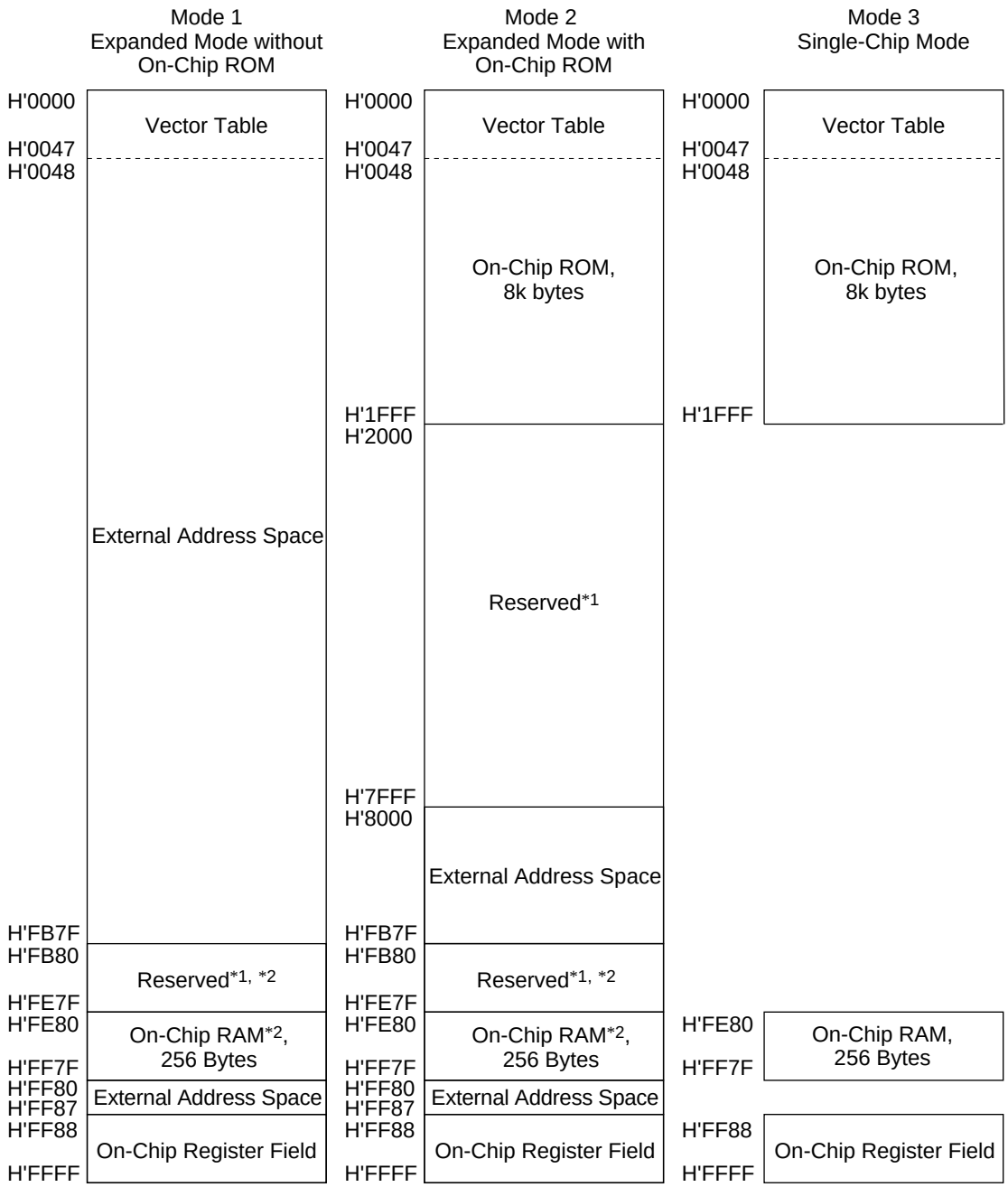

Notes: *1 Do not access these reserved areas.
*2 External memory can be accessed at these addresses when the RAME bit in the system control register (SYSCR) is cleared to 0.

Figure 2-4. H8/326 Address Space Map

Section 3. CPU

3.1 Overview

The H8/329 Series has the H8/300 CPU: a fast central processing unit with eight 16-bit general registers (also configurable as 16 eight-bit registers) and a concise instruction set designed for high-speed operation.

3.1.1 Features

The main features of the H8/300 CPU are listed below.

- Two-way register configuration
  - Sixteen 8-bit general registers, or
  - Eight 16-bit general registers
- Instruction set with 57 basic instructions, including:
  - Multiply and divide instructions
  - Powerful bit-manipulation instructions
- Eight addressing modes
  - Register direct (Rn)
  - Register indirect (@Rn)
  - Register indirect with displacement (@(d:16, Rn))
  - Register indirect with post-increment or pre-decrement (@Rn+ or @–Rn)
  - Absolute address (@aa:8 or @aa:16)
  - Immediate (#xx:8 or #xx:16)
  - PC-relative (@(d:8, PC))
  - Memory indirect (@@aa:8)
- Maximum 64K-byte address space
- High-speed operation
  - All frequently-used instructions are executed two to four states
  - The maximum clock rate is 10MHz
    - 8- or 16-bit register-register add or subtract: 0.2µs
    - 8 × 8-bit multiply: 1.4µs
    - 16 ÷ 8-bit divide: 1.4µs
- Power-down mode
  - SLEEP instruction

3.2 Register Configuration

Figure 3-1 shows the register structure of the CPU. There are two groups of registers: the general registers and control registers.

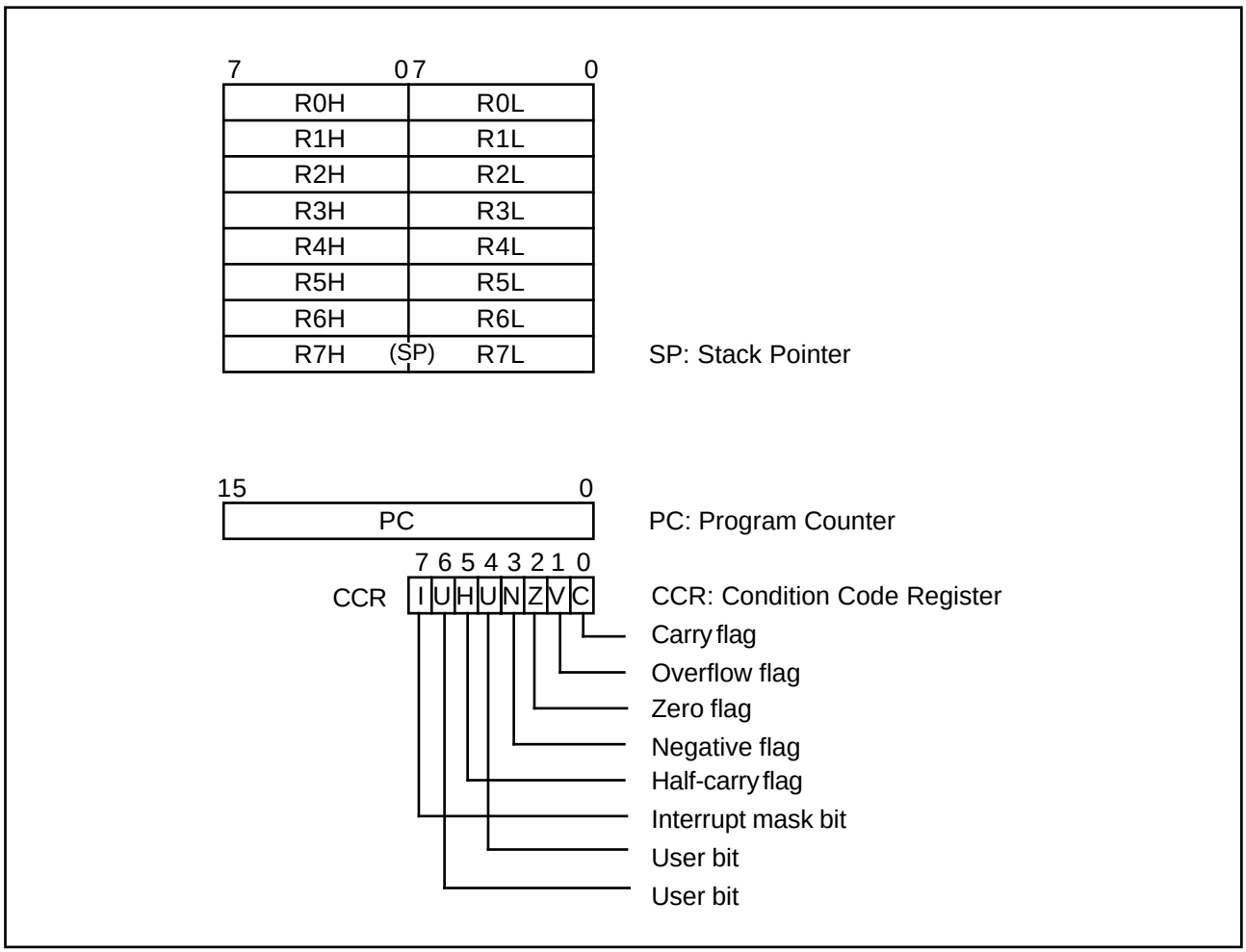

Figure 3-1. CPU Registers

3.2.1 General Registers

All the general registers can be used as both data registers and address registers. When used as address registers, the general registers are accessed as 16-bit registers (R0 to R7). When used as data registers, they can be accessed as 16-bit registers, or the high and low bytes can be accessed separately as 8-bit registers (R0H to R7H and R0L to R7L).

R7 also functions as the stack pointer, used implicitly by hardware in processing interrupts and subroutine calls. In assembly-language coding, R7 can also be denoted by the letters SP. As indicated in figure 3-2, R7 (SP) points to the top of the stack.

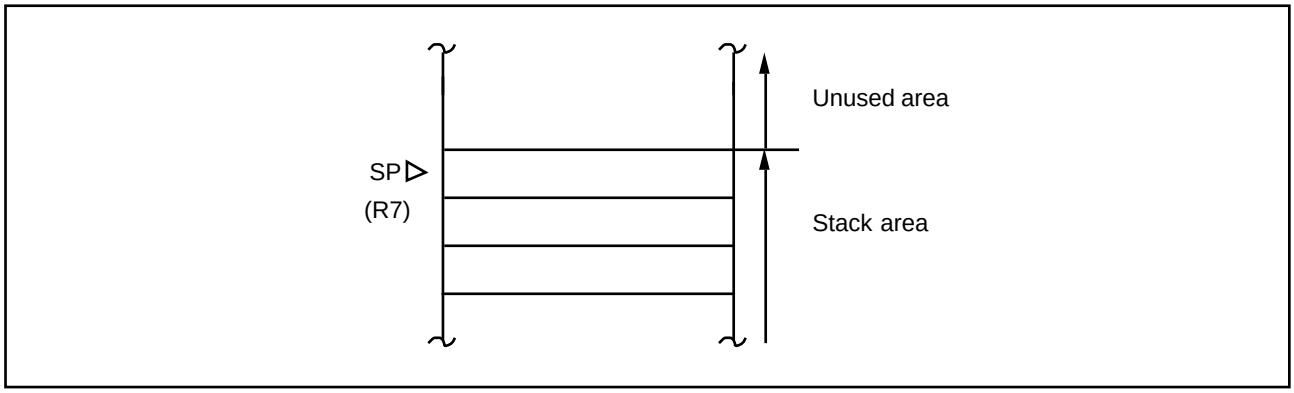

Figure 3-2. Stack Pointer

3.2.2 Control Registers

The CPU control registers include a 16-bit program counter (PC) and an 8-bit condition code register (CCR).

(1) Program Counter (PC): This 16-bit register indicates the address of the next instruction the CPU will execute. Each instruction is accessed in 16 bits (1 word), so the least significant bit of the PC is ignored (always regarded as 0).

(2) Condition Code Register (CCR): This 8-bit register contains internal status information, including carry (C), overflow (V), zero (Z), negative (N), and half-carry (H) flags and the interrupt mask bit (I).

Bit 7—Interrupt Mask Bit (I): When this bit is set to “1,” all interrupts except NMI are masked. This bit is set to “1” automatically by a reset and at the start of interrupt handling.

Bit 6—User Bit (U): This bit can be written and read by software (using the LDC, STC, ANDC, ORC, and XORC instructions).

Bit 5—Half-Carry Flag (H): This flag is set to “1” when the ADD.B, ADDX.B, SUB.B, SUBX.B, NEG.B, or CMP.B instruction causes a carry or borrow out of bit 3, and is cleared to “0” otherwise. Similarly, it is set to “1” when the ADD.W, SUB.W, or CMP.W instruction causes a carry or borrow out of bit 11, and cleared to “0” otherwise. It is used implicitly in the DAA and DAS instructions.

Bit 4—User Bit (U): This bit can be written and read by software (using the LDC, STC, ANDC, ORC, and XORC instructions).

Bit 3—Negative Flag (N): This flag indicates the most significant bit (sign bit) of the result of an instruction.

Bit 2—Zero Flag (Z): This flag is set to “1” to indicate a zero result and cleared to “0” to indicate a nonzero result.

Bit 1—Overflow Flag (V): This flag is set to “1” when an arithmetic overflow occurs, and cleared to “0” at other times.

Bit 0—Carry Flag (C): This flag is used by:

- Add and subtract instructions, to indicate a carry or borrow at the most significant bit of the result
- Shift and rotate instructions, to store the value shifted out of the most significant or least significant bit
- Bit manipulation and bit load instructions, as a bit accumulator

The LDC, STC, ANDC, ORC, and XORC instructions enable the CPU to load and store the CCR, and to set or clear selected bits by logic operations. The N, Z, V, and C flags are used in conditional branching instructions (BCC).

For the action of each instruction on the flag bits, see the *H8/300 Series Programming Manual*.

3.2.3 Initial Register Values

When the CPU is reset, the program counter (PC) is loaded from the vector table and the interrupt mask bit (I) in the CCR is set to “1.” The other CCR bits and the general registers are not initialized.

In particular, the stack pointer (R7) is not initialized. To prevent program crashes the stack pointer should be initialized by software, by the first instruction executed after a reset.

3.3 Addressing Modes

3.3.1 Addressing Mode

The H8/300 CPU supports eight addressing modes. Each instruction uses a subset of these addressing modes.

Table 3-1. Addressing Modes

No.	Addressing mode	Symbol
(1)	Register direct	Rn
(2)	Register indirect	@Rn
(3)	Register indirect with displacement	@(d:16, Rn)
(4)	Register indirect with post-increment	@Rn+
	Register indirect with pre-decrement	@–Rn
(5)	Absolute address	@aa:8 or @aa:16
(6)	Immediate	#xx:8 or #xx:16
(7)	Program-counter-relative	@(d:8, PC)
(8)	Memory indirect	@@aa:8

(1) Register Direct—Rn: The register field of the instruction specifies an 8- or 16-bit general register containing the operand. In most cases the general register is accessed as an 8-bit register. Only the MOV.W, ADD.W, SUB.W, CMP.W, ADDS, SUBS, MULXU (8 bits × 8 bits), and DIVXU (16 bits ÷ 8 bits) instructions have 16-bit operands.

(2) Register indirect—@Rn: The register field of the instruction specifies a 16-bit general register containing the address of the operand.

(3) Register Indirect with Displacement—@(d:16, Rn): This mode, which is used only in MOV instructions, is similar to register indirect but the instruction has a second word (bytes 3 and 4) which is added to the contents of the specified general register to obtain the operand address. For the MOV.W instruction, the resulting address must be even.

(4) Register Indirect with Post-Increment or Pre-Decrement—@Rn+ or @–Rn:

- Register indirect with Post-Increment—@Rn+
  The @Rn+ mode is used with MOV instructions that load registers from memory.
  It is similar to the register indirect mode, but the 16-bit general register specified in the register field of the instruction is incremented after the operand is accessed. The size of the increment is

1 or 2 depending on the size of the operand: 1 for MOV.B; 2 for MOV.W. For MOV.W, the original contents of the 16-bit general register must be even.

- Register Indirect with Pre-Decrement—@–Rn
  The @–Rn mode is used with MOV instructions that store register contents to memory. It is similar to the register indirect mode, but the 16-bit general register specified in the register field of the instruction is decremented before the operand is accessed. The size of the decrement is 1 or 2 depending on the size of the operand: 1 for MOV.B; 2 for MOV.W. For MOV.W, the original contents of the 16-bit general register must be even.

(5) Absolute Address—@aa:8 or @aa:16: The instruction specifies the absolute address of the operand in memory. The MOV.B instruction uses an 8-bit absolute address of the form H'FFxx. The upper 8 bits are assumed to be 1, so the possible address range is H'FF00 to H'FFFF (65280 to 65535). The MOV.B, MOV.W, JMP, and JSR instructions can use 16-bit absolute addresses.

(6) Immediate—#xx:8 or #xx:16: The instruction contains an 8-bit operand in its second byte, or a 16-bit operand in its third and fourth bytes. Only MOV.W instructions can contain 16-bit immediate values.
The ADDS and SUBS instructions implicitly contain the value 1 or 2 as immediate data. Some bit manipulation instructions contain 3-bit immediate data (#xx:3) in the second or fourth byte of the instruction, specifying a bit number.

(7) Program-Counter-Relative—@(d:8, PC): This mode is used to generate branch addresses in the Bcc and BSR instructions. An 8-bit value in byte 2 of the instruction code is added as a sign-extended value to the program counter contents. The result must be an even number. The possible branching range is –126 to +128 bytes (–63 to +64 words) from the current address.

(8) Memory Indirect—@@aa:8: This mode can be used by the JMP and JSR instructions. The second byte of the instruction code specifies an 8-bit absolute address from H'0000 to H'00FF (0 to 255). The word located at this address contains the branch address. Note that addresses H'0000 to H'0047 (0 to 71) are located in the vector table.

If an odd address is specified as a branch destination or as the operand address of a MOV.W instruction, the least significant bit is regarded as “0,” causing word access to be performed at the address preceding the specified address. See section 3.4.2, “Memory Data Formats,” for further information.

3.3.2 How to Calculate Where the Execution Starts

Table 3-2 shows how to calculate the Effective Address (EA: Effective Address) for each addressing mode.

In the operation instruction, 1) register direct, as well as 6) immediate (for each instruction, ADD.B, ADDX, SUBX, CMP.B, AND, OR, XOR) are used.

In the move instruction, 7) program counter relative and 8) all addressing mode to delete the memory indirect can be used.

In the bit manipulation instruction for the operand specifications, 1) register direct, 2) register indirect, as well as 5) absolute address (8 bit) can be used. Furthermore, to specify the bit number within the operand, 1) register direct (for each instruction, BSET, BCLR, BNOT, BTST) as well as 6) immediate (3 bit) can be used independently.

Table 3-2. Effective Address Calculation (1)

No.	Addressing mode and instruction format	Effective address calculation	Effective address
1	Register direct, Rn		
2	Register indirect, @Rn		
3	Register indirect with displacement, @(d:16, Rn)		
4	Register indirect with post-increment, @Rn+		
	Register indirect with pre-decrement, @–Rn		

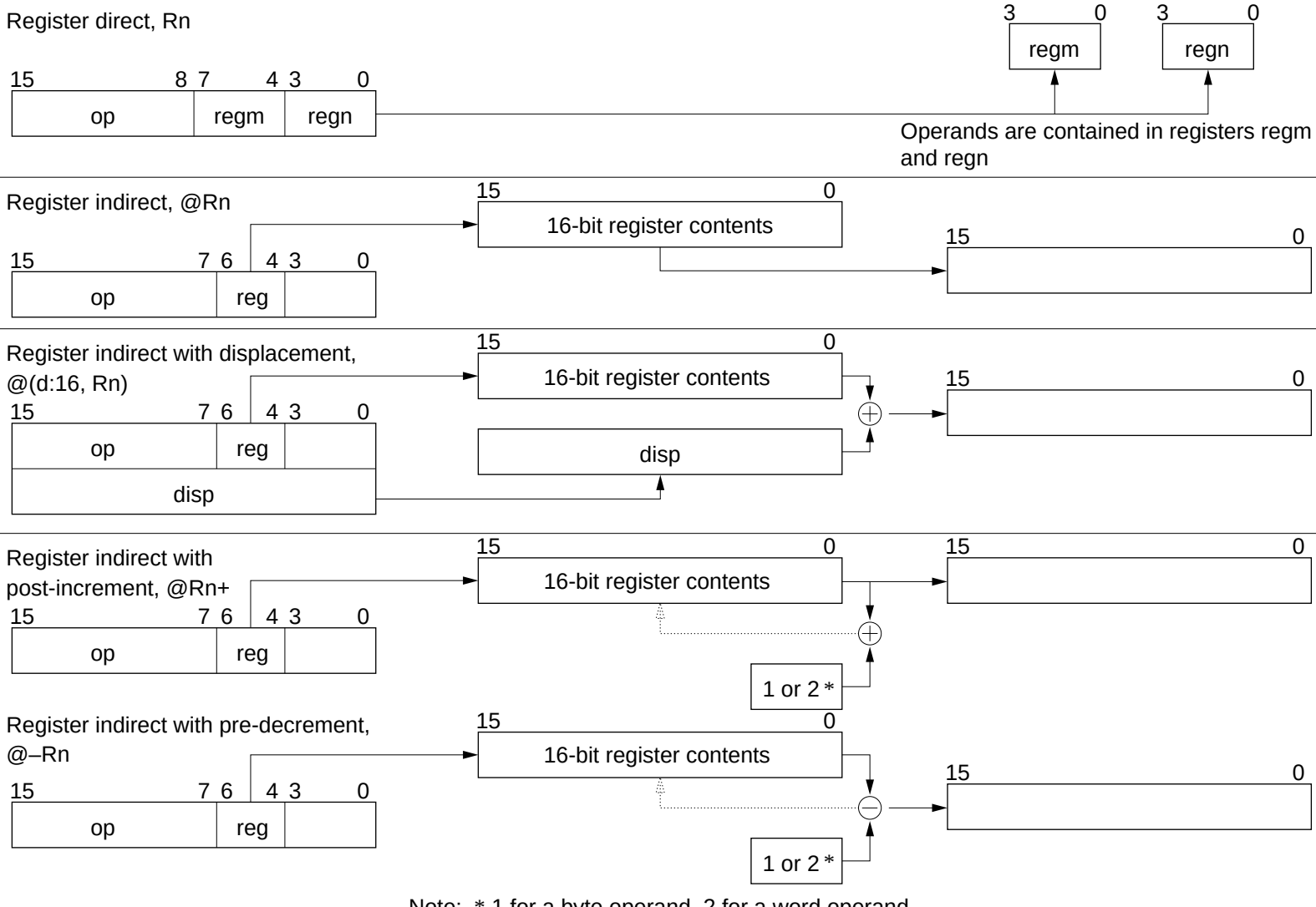

Note: * 1 for a byte operand, 2 for a word operand

Table 3-2. Effective Address Calculation (2)

No.	Addressing mode and instruction format	Effective address calculation	Effective address
5	Absolute address @aa:8 15 8 7 0 op | abs		15 8 7 0 H'FF |
	@aa:16 15 0 op abs		15 0
6	Immediate #xx:8 15 8 7 0 op | IMM		
	#xx:16 15 0 op IMM		Operand is 1- or 2-byte immediate data
7	PC-relative @(d:8, PC) 15 8 7 0 op | disp	15 0 PC contents ⊕ Sign extension | disp	15 0

Table 3-2. Effective Address Calculation (3)

No.	Addressing mode and instruction format	Effective address calculation	Effective address
8	Memory indirect, @@aa:8		

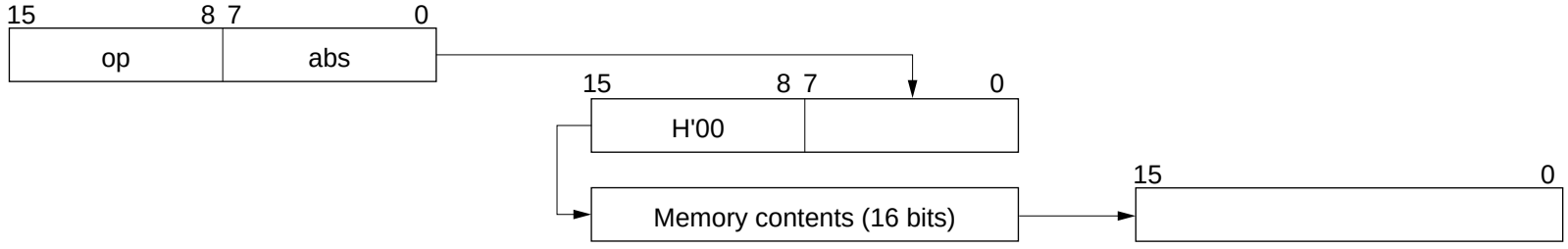

Notation
reg: General register
op: Operation code
disp: Displacement
IMM: Immediate data
abs: Absolute address

3.4 Data Formats

The H8/300 CPU can process 1-bit data, 4-bit (BCD) data, 8-bit (byte) data, and 16-bit (word) data.

- Bit manipulation instructions operate on 1-bit data specified as bit n (n = 0, 1, 2, ..., 7) in a byte operand.
- All arithmetic and logic instructions except ADDS and SUBS can operate on byte data.
- The DAA and DAS instruction perform decimal arithmetic adjustments on byte data in packed BCD form. Each nibble of the byte is treated as a decimal digit.
- The MOV.W, ADD.W, SUB.W, CMP.W, ADDS, SUBS, MULXU (8 bits × 8 bits), and DIVXU (16 bits ÷ 8 bits) instructions operate on word data.

3.4.1 Data Formats in General Registers

Data of all the sizes above can be stored in general registers as shown in figure 3-3.

Data type	Register No.	Data format
1-Bit data	RnH	7 0 7 6 5 4 3 2 1 0 Don't-care
1-Bit data	RnL	7 0 Don't-care 7 6 5 4 3 2 1 0
Byte data	RnH	7 0 MSB LSB Don't-care
Byte data	RnL	7 0 Don't-care MSB LSB
Word data	Rn	15 0 MSB LSB
4-Bit BCD data	RnH	7 4 3 0 Upper digit Lower digit Don't-care
4-Bit BCD data	RnL	7 4 3 0 Don't-care Upper digit Lower digit

Figure 3-3. Register Data Formats

Note: RnH: Upper digit of general register
RnL: Lower digit of general register
MSB: Most significant bit
LSB: Least significant bit

3.4.2 Memory Data Formats

Figure 3-4 indicates the data formats in memory.

Word data stored in memory must always begin at an even address. In word access the least significant bit of the address is regarded as “0.” If an odd address is specified, no address error occurs but the access is performed at the preceding even address. This rule affects MOV.W instructions and branching instructions, and implies that only even addresses should be stored in the vector table.

Data type	Address	Data format
1-Bit data	Address n	7 0 7 6 5 4 3 2 1 0
Byte data	Address n	MSB LSB
Word data	Even address Odd address	MSB Upper 8 bits Lower 8 bits LSB
Byte data (CCR) on stack	Even address Odd address	MSB CCR LSB MSB CCR* LSB
Word data on stack	Even address Odd address	MSB LSB

CCR: Condition Code Register

Note: * Ignored when returned

Figure 3-4. Memory Data Formats

When the stack is addressed using R7, it must always be accessed a word at a time. When the CCR is pushed on the stack, two identical copies of the CCR are pushed to make a complete word. When they are returned, the lower byte is ignored.

3.5 Instruction Set

Table 3-3 lists the H8/300 instruction set.

Table 3-3. Instruction Classification

Function	Instructions	Types
Data transfer	MOV, MOVTPE*3, MOVFPE*3, PUSH*1, POP*1	3
Arithmetic operations	ADD, SUB, ADDX, SUBX, INC, DEC, ADDS, SUBS, DAA, DAS, MULXU, DIVXU, CMP, NEG	14
Logic operations	AND, OR, XOR, NOT	4
Shift	SHAL, SHAR, SHLL, SHLR, ROTL, ROTR, ROTXL, ROTXR	8
Bit manipulation	BSET, BCLR, BNOT, BTST, BAND, BIAND, BOR, BIOR, BXOR, BIXOR, BLD, BILD, BST, BIST	14
Branch	Bcc*2, JMP, BSR, JSR, RTS	5
System control	RTE, SLEEP, LDC, STC, ANDC, ORC, XORC, NOP	8
Block data transfer	EEPMOV	1
	Total	57

Notes: *1 PUSH Rn is equivalent to MOV.W Rn, @–SP.
POP Rn is equivalent to MOV.W @SP+, Rn.
*2 Bcc is a conditional branch instruction in which cc represents a condition code.
*3 Not supported by the H8/329 Series.

The following sections give a concise summary of the instructions in each category, and indicate the bit patterns of their object code. The notation used is defined next.

Operation Notation

Rd	General register (destination)
Rs	General register (source)
Rn	General register
(EAd)	Destination operand
(EAs)	Source operand
SP	Stack pointer
PC	Program counter
CCR	Condition code register
N	N (negative) flag of CCR
Z	Z (zero) flag of CCR
V	V (overflow) flag of CCR
C	C (carry) flag of CCR
#imm	Immediate data

#xx:3	3-Bit immediate data
#xx:8	8-Bit immediate data
#xx:16	16-Bit immediate data
disp	Displacement
+	Addition
–	Subtraction
×	Multiplication
÷	Division
∧	AND logical
∨	OR logical
⊕	Exclusive OR logical
→	Move
¬	Not

3.5.1 Data Transfer Instructions

Table 3-4 describes the data transfer instructions. Figure 3-5 shows their object code formats.

Table 3-4. Data Transfer Instructions

Instruction	Size*	Function
MOV	B/W	(EAs) → Rd, Rs → (EAd) Moves data between two general registers or between a general register and memory, or moves immediate data to a general register. The Rn, @Rn, @(d:16, Rn), @aa:16, #xx:8 or #xx:16, @–Rn, and @Rn+ addressing modes are available for byte or word data. The @aa:8 addressing mode is available for byte data only. The @–R7 and @R7+ modes require word operands. Do not specify byte size for these two modes.
MOVTPE	B	Not supported by the H8/329 Series.
MOVFPE	B	Not supported by the H8/329 Series.
PUSH	W	Rn → @–SP Pushes a 16-bit general register onto the stack. Equivalent to MOV.W Rn, @–SP.
POP	W	@SP+ → Rn Pops a 16-bit general register from the stack. Equivalent to MOV.W @SP+, Rn.

Note: * Size: operand size
B: Byte
W: Word

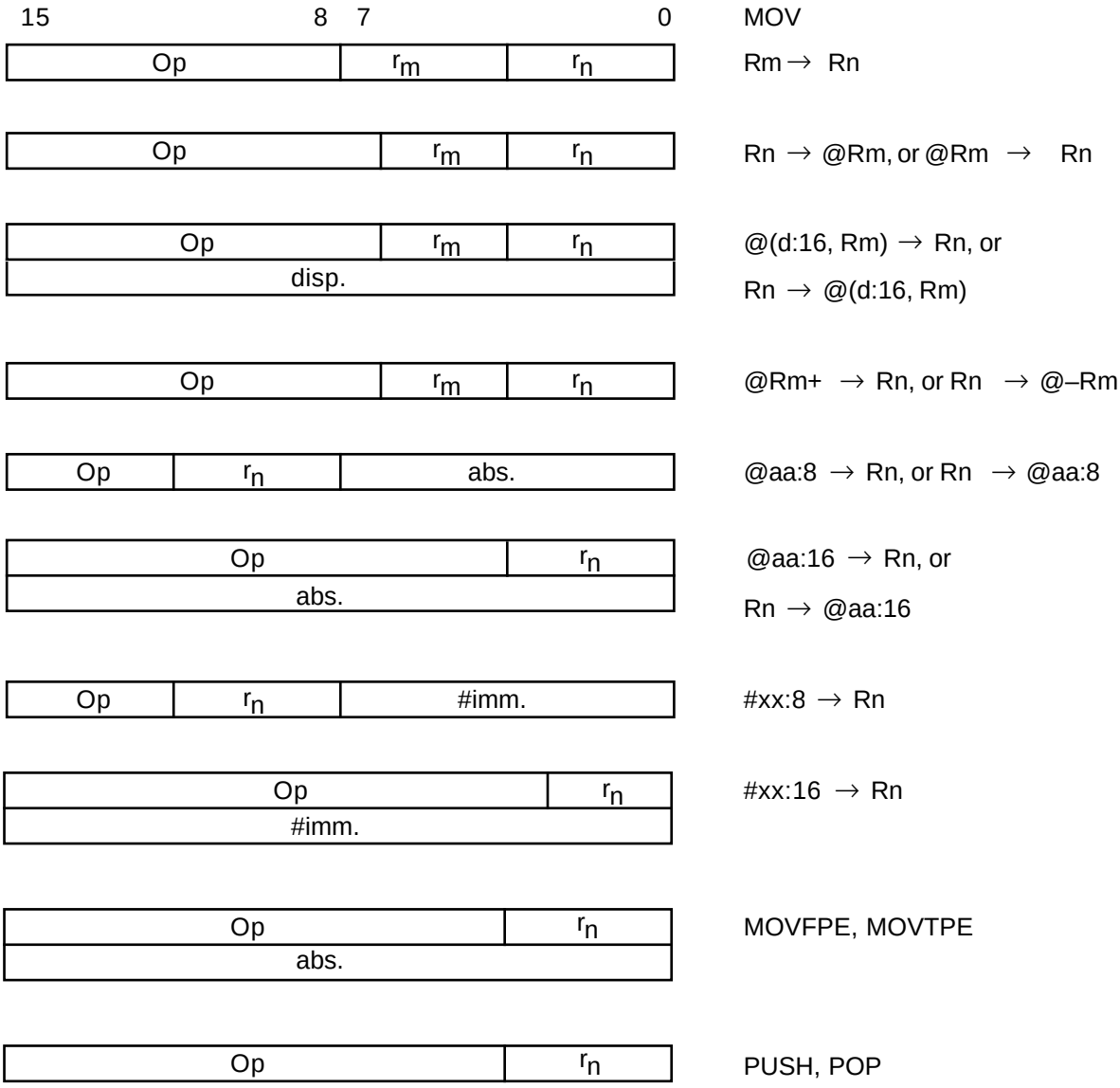

Figure 3-5. Data Transfer Instruction Codes

3.5.2 Arithmetic Operations

Table 3-5 describes the arithmetic instructions. See figure 3-6 in section 3.5.4, “Shift Operations” for their object codes.

Table 3-5. Arithmetic Instructions

Instruction	Size*	Function
ADD SUB	B/W	Rd ± Rs → Rd, Rd + #imm → Rd Performs addition or subtraction on data in two general registers, or addition on immediate data and data in a general register. Immediate data cannot be subtracted from data in a general register. Word data can be added or subtracted only when both words are in general registers.
ADDX SUBX	B	Rd ± Rs ± C → Rd, Rd ± #imm ± C → Rd Performs addition or subtraction with carry or borrow on byte data in two general registers, or addition or subtraction on immediate data and data in a general register.
INC DEC	B	Rd ± #1 → Rd Increments or decrements a general register.
ADDS SUBS	W	Rd ± #imm → Rd Adds or subtracts immediate data to or from data in a general register. The immediate data must be 1 or 2.
DAA DAS	B	Rd decimal adjust → Rd Decimal-adjusts (adjusts to packed BCD) an addition or subtraction result in a general register by referring to the CCR.
MULXU	B	Rd × Rs → Rd Performs 8-bit × 8-bit unsigned multiplication on data in two general registers, providing a 16-bit result.
DIVXU	B	Rd ÷ Rs → Rd Performs 16-bit ÷ 8-bit unsigned division on data in two general registers, providing an 8-bit quotient and 8-bit remainder.
CMP	B/W	Rd – Rs, Rd – #imm Compares data in a general register with data in another general register or with immediate data. Word data can be compared only between two general registers.
NEG	B	0 – Rd → Rd Obtains the two’s complement (arithmetic complement) of data in a general register.

Note: * Size: operand size
B: Byte
W: Word

3.5.3 Logic Operations

Table 3-6 describes the four instructions that perform logic operations. See figure 3-6 in section 3.5.4, “Shift Operations,” for their object codes.

Table 3-6. Logic Operation Instructions

Instruction	Size*	Function
AND	B	Rd $\wedge$ Rs $\rightarrow$ Rd, Rd $\wedge$ #imm $\rightarrow$ Rd Performs a logical AND operation on a general register and another general register or immediate data.
OR	B	Rd $\vee$ Rs $\rightarrow$ Rd, Rd $\vee$ #imm $\rightarrow$ Rd Performs a logical OR operation on a general register and another general register or immediate data.
XOR	B	Rd $\oplus$ Rs $\rightarrow$ Rd, Rd $\oplus$ #imm $\rightarrow$ Rd Performs a logical exclusive OR operation on a general register and another general register or immediate data.
NOT	B	$\neg$ (Rd) $\rightarrow$ (Rd) Obtains the one’s complement (logical complement) of general register contents.

Note: * Size: operand size
B: Byte

3.5.4 Shift Operations

Table 3-7 describes the eight shift instructions. Figure 3-6 shows the object code formats of the arithmetic, logic, and shift instructions.

Table 3-7. Shift Instructions

Instruction	Size*	Function
SHAL SHAR	B	Rd shift $\rightarrow$ Rd Performs an arithmetic shift operation on general register contents.
SHLL SHLR	B	Rd shift $\rightarrow$ Rd Performs a logical shift operation on general register contents.
ROTL ROTR	B	Rd rotate $\rightarrow$ Rd Rotates general register contents.
ROTXL ROTXR	B	Rd rotate through carry $\rightarrow$ Rd Rotates general register contents through the C (carry) bit.

Note: * Size: operand size
B: Byte

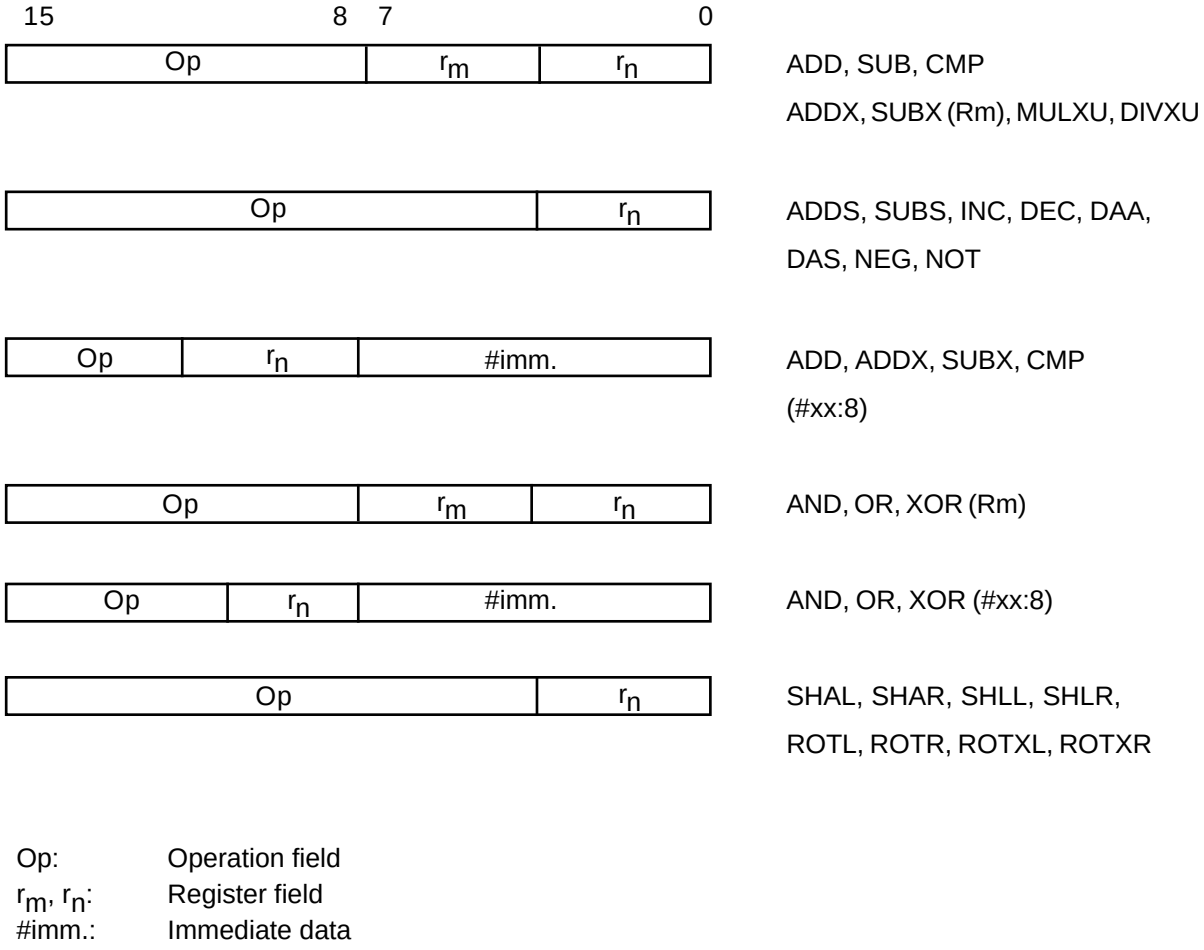

Op: Operation field
r_m, r_n: Register field
#imm.: Immediate data

Figure 3-6. Arithmetic, Logic, and Shift Instruction Codes

3.5.5 Bit Manipulations

Table 3-8 describes the bit-manipulation instructions. Figure 3-7 shows their object code formats.

Table 3-8. Bit-Manipulation Instructions (1)

Instruction	Size*	Function
BSET	B	1 → (<bit-No.> of <EAd>) Sets a specified bit in a general register or memory to "1." The bit is specified by a bit number, given in 3-bit immediate data or the lower three bits of a general register.
BCLR	B	0 → (<bit-No.> of <EAd>) Clears a specified bit in a general register or memory to "0." The bit is specified by a bit number, given in 3-bit immediate data or the lower three bits of a general register.
BNOT	B	¬ (<bit-No.> of <EAd>) → (<bit-No.> of <EAd>) Inverts a specified bit in a general register or memory. The bit is specified by a bit number, given in 3-bit immediate data or the lower three bits of a general register
BTST	B	¬ (<bit-No.> of <EAd>) → Z Tests a specified bit in a general register or memory and sets or clears the Z flag accordingly. The bit is specified by a bit number, given in 3-bit immediate data or the lower three bits of a general register.
BAND	B	C ∧ (<bit-No.> of <EAd>) → C ANDs the C flag with a specified bit in a general register or memory.
BIAND		C ∧ [¬ (<bit-No.> of <EAd>)] → C ANDs the C flag with the inverse of a specified bit in a general register or memory. The bit number is specified by 3-bit immediate data.
BOR	B	C ∨ (<bit-No.> of <EAd>) → C ORs the C flag with a specified bit in a general register or memory.
BIOR		C ∨ [¬ (<bit-No.> of <EAd>)] → C ORs the C flag with the inverse of a specified bit in a general register or memory. The bit number is specified by 3-bit immediate data.
BXOR	B	C ⊕ (<bit-No.> of <EAd>) → C XORs the C flag with a specified bit in a general register or memory.

Note: * Size: operand size
B: Byte

Table 3-8. Bit-Manipulation Instructions (2)

Instruction	Size*	Function
BIXOR	B	C ⊕ ¬ [(<bit-No.> of <EAd>)] → C XORs the C flag with the inverse of a specified bit in a general register or memory. The bit number is specified by 3-bit immediate data.
BLD	B	(<bit-No.> of <EAd>) → C Copies a specified bit in a general register or memory to the C flag.
BILD		¬ (<bit-No.> of <EAd>) → C Copies the inverse of a specified bit in a general register or memory to the C flag. The bit number is specified by 3-bit immediate data.
BST	B	C → (<bit-No.> of <EAd>) Copies the C flag to a specified bit in a general register or memory.
BIST		¬ C → (<bit-No.> of <EAd>) Copies the inverse of the C flag to a specified bit in a general register or memory. The bit number is specified by 3-bit immediate data.

Note: * Size: operand size
B: Byte

Notes on Bit Manipulation Instructions: BSET, BCLR, BNOT, BST, and BIST are read-modify-write instructions. They read a byte of data, modify one bit in the byte, then write the byte back. Care is required when these instructions are applied to registers with write-only bits and to the I/O port registers.

Step		Description
1	Read	Read one data byte at the specified address
2	Modify	Modify one bit in the data byte
3	Write	Write the modified data byte back to the specified address

Example: BCLR is executed to clear bit 0 in the port 4 data direction register (P4DDR) under the following conditions.

$P4_7$: Input pin, Low

$P4_6$: Input pin, High

$P4_5$ – $P4_0$: Output pins, Low

The intended purpose of this BCLR instruction is to switch $P4_0$ from output to input.

Before Execution of BCLR Instruction

	$P4_7$	**$P4_6$**	**$P4_5$**	**$P4_4$**	**$P4_3$**	**$P4_2$**	**$P4_1$**	**$P4_0$**
Input/output	Input	Input	Output	Output	Output	Output	Output	Output
Pin state	Low	High	Low	Low	Low	Low	Low	Low
DDR	0	0	1	1	1	1	1	1
DR	1	0	0	0	0	0	0	0

Execution of BCLR Instruction

```
BCLR  #0, @P4DDR        ;clear bit 0 in data direction register
```

After Execution of BCLR Instruction

	$P4_7$	**$P4_6$**	**$P4_5$**	**$P4_4$**	**$P4_3$**	**$P4_2$**	**$P4_1$**	**$P4_0$**
Input/output	Output	Output	Output	Output	Output	Output	Output	Input
Pin state	Low	High	Low	Low	Low	Low	Low	High
DDR	1	1	1	1	1	1	1	0
DR	1	0	0	0	0	0	0	0

Explanation: To execute the BCLR instruction, the CPU begins by reading P4DDR. Since P4DDR is a write-only register, it is read as H'FF, even though its true value is H'3F.

Next the CPU clears bit 0 of the read data, changing the value to H'FE.

Finally, the CPU writes this value (H'FE) back to P4DDR to complete the BCLR instruction.

As a result, $P4_0$DDR is cleared to “0,” making $P4_0$ an input pin. In addition, $P4_7$DDR and $P4_6$DDR are set to “1,” making $P4_7$ and $P4_6$ output pins.

15 – 8	7 – 0		
Op	#imm.	r_n	BSET, BCLR, BNOT, BTST Operand: register direct (Rn) Bit No.: immediate (#xx:3)
Op	r_m	r_n	Operand: register direct (Rn) Bit No.: register direct (Rm)
Op	r_n	0 0 0 0	Operand: register indirect (@Rn)
Op	#imm.	0 0 0 0	Bit No.: immediate (#xx:3)
Op	r_n	0 0 0 0	Operand: register indirect (@Rn)
Op	r_m	0 0 0 0	Bit No.: register direct (Rm)
Op	abs.		Operand: absolute (@aa:8)
Op	#imm.	0 0 0 0	Bit No.: immediate (#xx:3)
Op	abs.		Operand: absolute (@aa:8)
Op	r_m	0 0 0 0	Bit No.: register direct (Rm)
			BAND, BOR, BXOR, BLD, BST
Op	#imm.	r_n	Operand: register direct (Rn) Bit No.: immediate (#xx:3)
Op	r_n	0 0 0 0	Operand: register indirect (@Rn)
Op	#imm.	0 0 0 0	Bit No.: immediate (#xx:3)
Op	abs.		Operand: absolute (@aa:8)
Op	#imm.	0 0 0 0	Bit No.: immediate (#xx:3)
			BIAND, BIOR, BIXOR, BILD, BIST
Op	#imm.	r_n	Operand: register direct (Rn) Bit No.: immediate (#xx:3)
Op	r_n	0 0 0 0	Operand: register indirect (@Rn)
Op	#imm.	0 0 0 0	Bit No.: immediate (#xx:3)
Op	abs.		Operand: absolute (@aa:8)
Op	#imm.	0 0 0 0	Bit No.: immediate (#xx:3)

Op: Operation field
r_m, r_n: Register field
abs.: Absolute address
#imm.: Immediate data

Figure 3-7. Bit Manipulation Instruction Codes

3.5.6 Branching Instructions

Table 3-9 describes the branching instructions. Figure 3-8 shows their object code formats.

Table 3-9. Branching Instructions

Instruction	Size	Function
`Bcc`	—	Branches to the specified address if condition cc is true.

Mnemonic	cc field	Description	Condition
`BRA (BT)`	0 0 0 0	Always (True)	Always
`BRN (BF)`	0 0 0 1	Never (False)	Never
`BHI`	0 0 1 0	High	$C \vee Z = 0$
`BLS`	0 0 1 1	Low or Same	$C \vee Z = 1$
`BCC (BHS)`	0 1 0 0	Carry Clear (High or Same)	$C = 0$
`BCS (BLO)`	0 1 0 1	Carry Set (Low)	$C = 1$
`BNE`	0 1 1 0	Not Equal	$Z = 0$
`BEQ`	0 1 1 1	Equal	$Z = 1$
`BVC`	1 0 0 0	Overflow Clear	$V = 0$
`BVS`	1 0 0 1	Overflow Set	$V = 1$
`BPL`	1 0 1 0	Plus	$N = 0$
`BMI`	1 0 1 1	Minus	$N = 1$
`BGE`	1 1 0 0	Greater or Equal	$N \oplus V = 0$
`BLT`	1 1 0 1	Less Than	$N \oplus V = 1$
`BGT`	1 1 1 0	Greater Than	$Z \vee (N \oplus V) = 0$
`BLE`	1 1 1 1	Less or Equal	$Z \vee (N \oplus V) = 1$

`JMP`	—	Branches unconditionally to a specified address.
`JSR`	—	Branches to a subroutine at a specified address.
`BSR`	—	Branches to a subroutine at a specified displacement from the current address.
`RTS`	—	Returns from a subroutine

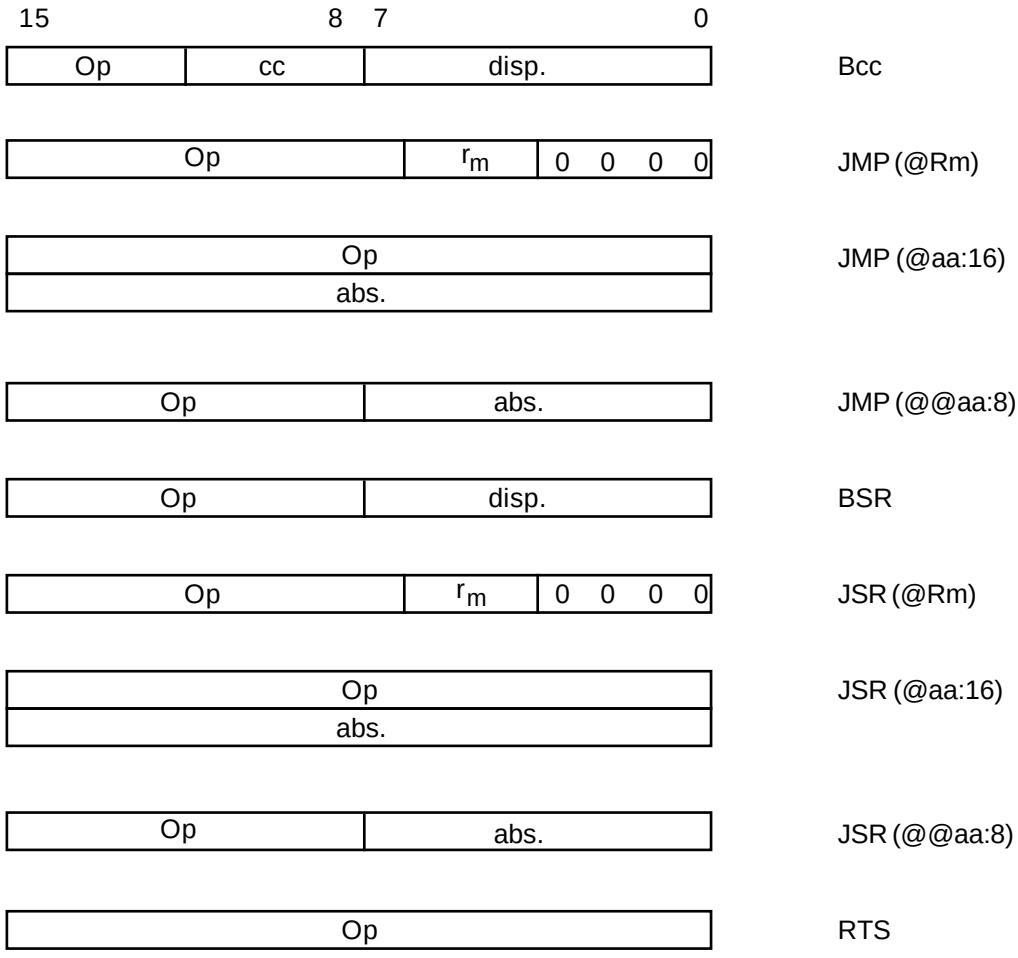

Op: Operation field
cc: Condition field
r_m: Register field
disp.: Displacement
abs.: Absolute address

Figure 3-8. Branching Instruction Codes

3.5.7 System Control Instructions

Table 3-10 describes the system control instructions. Figure 3-9 shows their object code formats.

Table 3-10. System Control Instructions

Instruction	Size	Function
RTE	—	Returns from an exception-handling routine.
SLEEP	—	Causes a transition to the power-down state.
LDC	B	Rs → CCR, #imm → CCR Moves immediate data or general register contents to the condition code register.
STC	B	CCR → Rd Copies the condition code register to a specified general register.
ANDC	B	CCR ∧ #imm → CCR Logically ANDs the condition code register with immediate data.
ORC	B	CCR ∨ #imm → CCR Logically ORs the condition code register with immediate data.
XORC	B	CCR ⊕ #imm → CCR Logically exclusive-ORs the condition code register with immediate data.
NOP	—	PC + 2 → PC Only increments the program counter.

Note: * Size: operand size
B: Byte

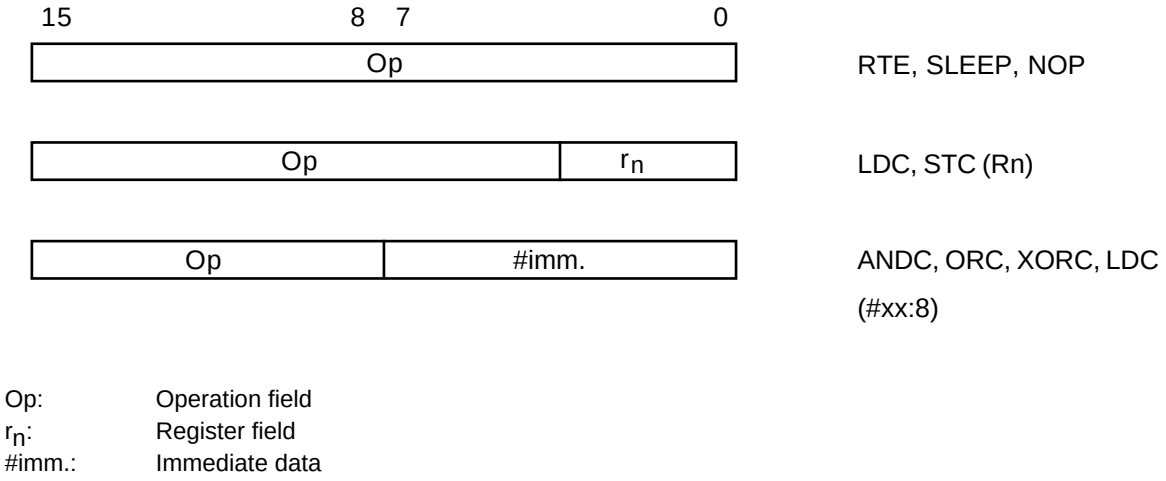

Op: Operation field
r_n: Register field
#imm.: Immediate data

Figure 3-9. System Control Instruction Codes

3.5.8 Block Data Transfer Instruction

Table 3-11 describes the EEPMOV instruction. Figure 3-10 shows its object code format.

Table 3-11. Block Data Transfer Instruction/EEPROM Write Operation

Instruction	Size	Function
EEPMOV	—	if R4L ≠ 0 then repeat @R5+ → @R6+ R4L – 1 → R4L until R4L = 0 else next; Moves a data block according to parameters set in general registers R4L, R5, and R6. R4L: size of block (bytes) R5: starting source address R6: starting destination address Execution of the next instruction starts as soon as the block transfer is completed.

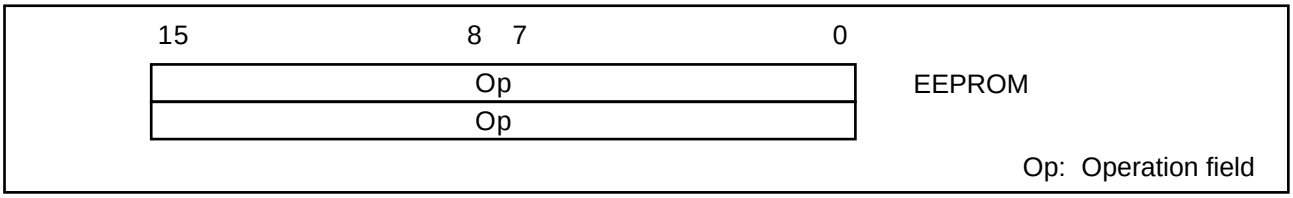

Figure 3-10. Block Data Transfer Instruction/EEPROM Write Operation Code

Notes on EEPMOV Instruction

1. The EEPMOV instruction is a block data transfer instruction. It moves the number of bytes specified by R4L from the address specified by R5 to the address specified by R6.

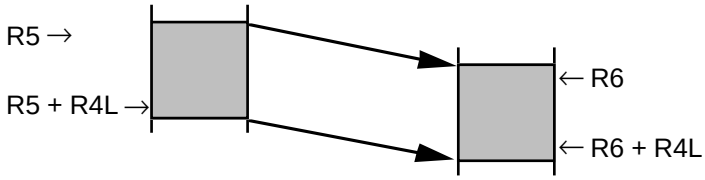

2. When setting R4L and R6, make sure that the final destination address (R6 + R4L) does not exceed H'FFFF. The value in R6 must not change from H'FFFF to H'0000 during execution of the instruction.

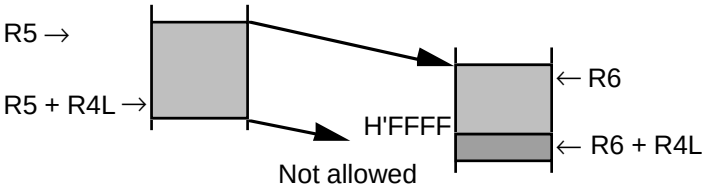

3.6 CPU States

The CPU has three states: the program execution state, exception-handling state, and power-down state. The power-down state is further divided into three modes: the sleep mode, software standby mode, and hardware standby mode. Figure 3-11 summarizes these states, and figure 3-12 shows a map of the state transitions.

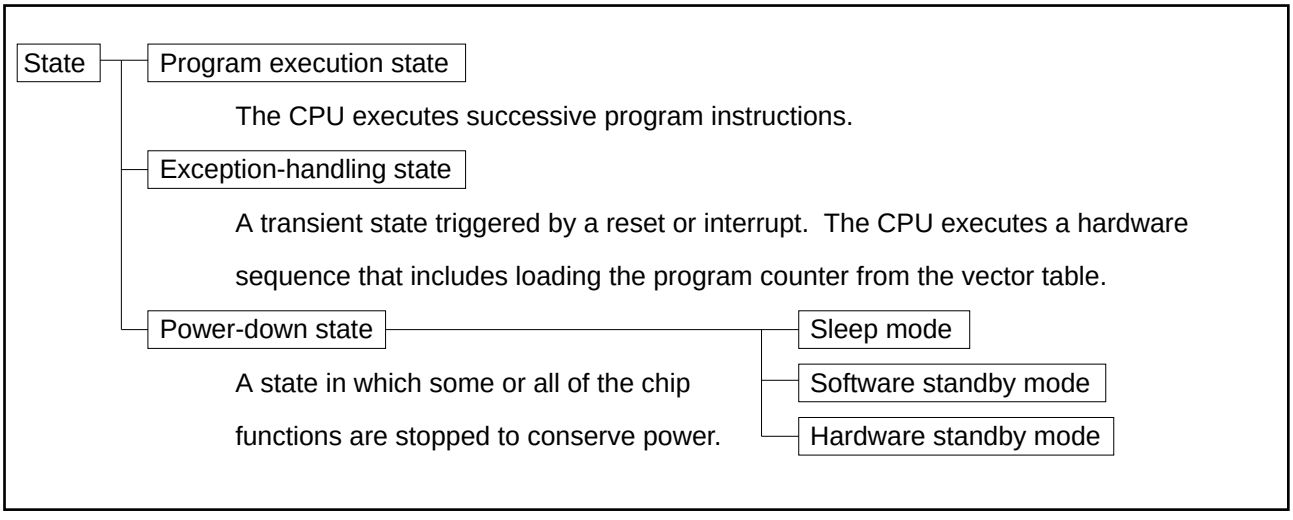

Figure 3-11. Operating States

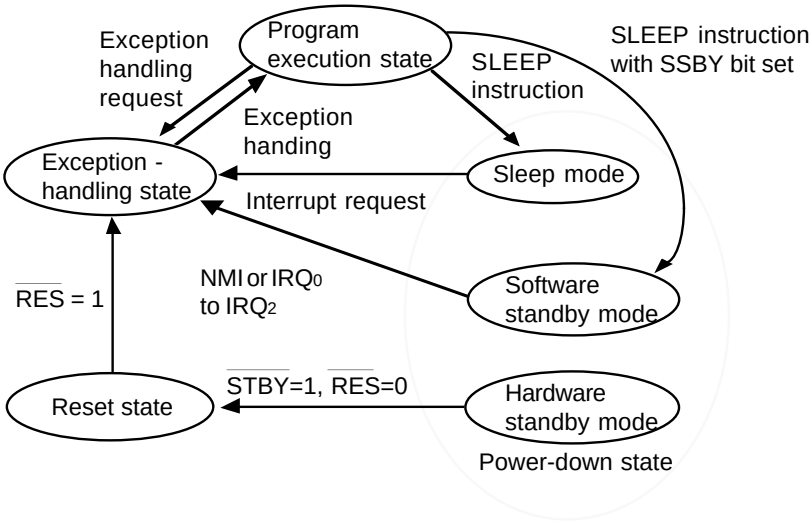

Notes: *1 A transition to the reset state occurs when $\overline{RES}$ goes Low, except when the chip is in the hardware standby mode.
*2 A transition from any state to the hardware standby mode occurs when $\overline{STBY}$ goes Low.

Figure 3-12. State Transitions

3.6.1 Program Execution State

In this state the CPU executes program instructions.

3.6.2 Exception-Handling State

The exception-handling state is a transient state that occurs when the CPU is reset or accepts an interrupt. In this state the CPU carries out a hardware-controlled sequence that prepares it to execute a user-coded exception-handling routine.

In the hardware exception-handling sequence the CPU does the following:

(1) Saves the program counter and condition code register to the stack (except in the case of a reset).
(2) Sets the interrupt mask (I) bit in the condition code register to “1.”
(3) Fetches the start address of the exception-handling routine from the vector table.
(4) Branches to that address, returning to the program execution state.

See section 4, “Exception Handling,” for further information on the exception-handling state.

3.6.3 Power-Down State

The power-down state includes three modes: the sleep mode, the software standby mode, and the hardware standby mode.

(1) Sleep Mode: The sleep mode is entered when a SLEEP instruction is executed. The CPU halts, but CPU register contents remain unchanged and the on-chip supporting modules continue to function.

(2) Software Standby Mode: The software standby mode is entered if the SLEEP instruction is executed while the SSBY (Software Standby) bit in the system control register (SYSCR) is set. The CPU and all on-chip supporting modules halt. The on-chip supporting modules are initialized, but the contents of the on-chip RAM and CPU registers remain unchanged. I/O port outputs also remain unchanged.

(3) Hardware Standby Mode: The hardware standby mode is entered when the input at the $\overline{\text{STBY}}$ pin goes Low. All chip functions halt, including I/O port output. The on-chip supporting modules are initialized, but on-chip RAM contents are held.

See section 12, “Power-Down State,” for further information.

3.7 Access Timing and Bus Cycle

The CPU is driven by the system clock (Ø). The period from one rising edge of the system clock to the next is referred to as a “state.”

Memory access is performed in a two- or three-state bus cycle. On-chip memory, on-chip supporting modules, and external devices are accessed in different bus cycles as described below.

3.7.1 Access to On-Chip Memory (RAM and ROM)

On-chip ROM and RAM are accessed in a cycle of two states designated T_1 and T_2. Either byte or word data can be accessed, via a 16-bit data bus. Figure 3-13 shows the on-chip memory access cycle. Figure 3-14 shows the associated pin states.

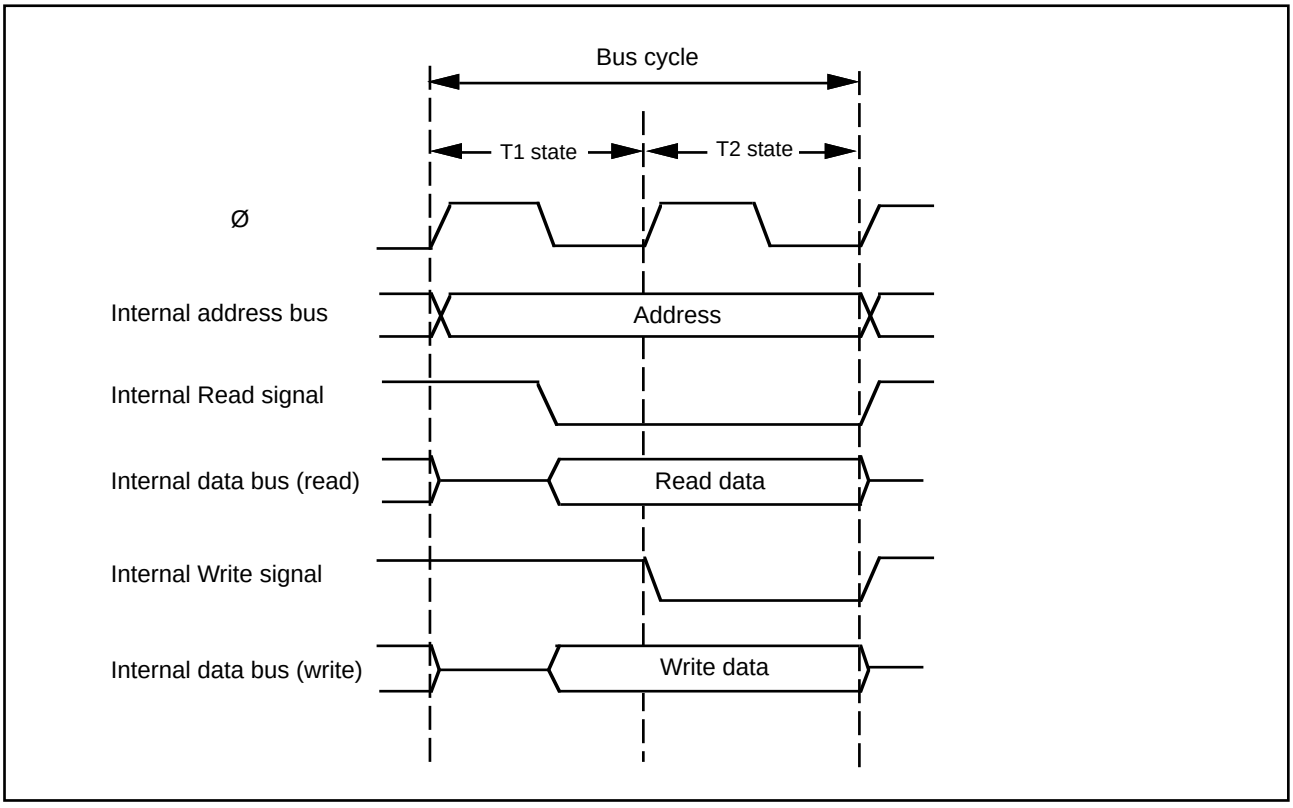

Figure 3-13. On-Chip Memory Access Cycle

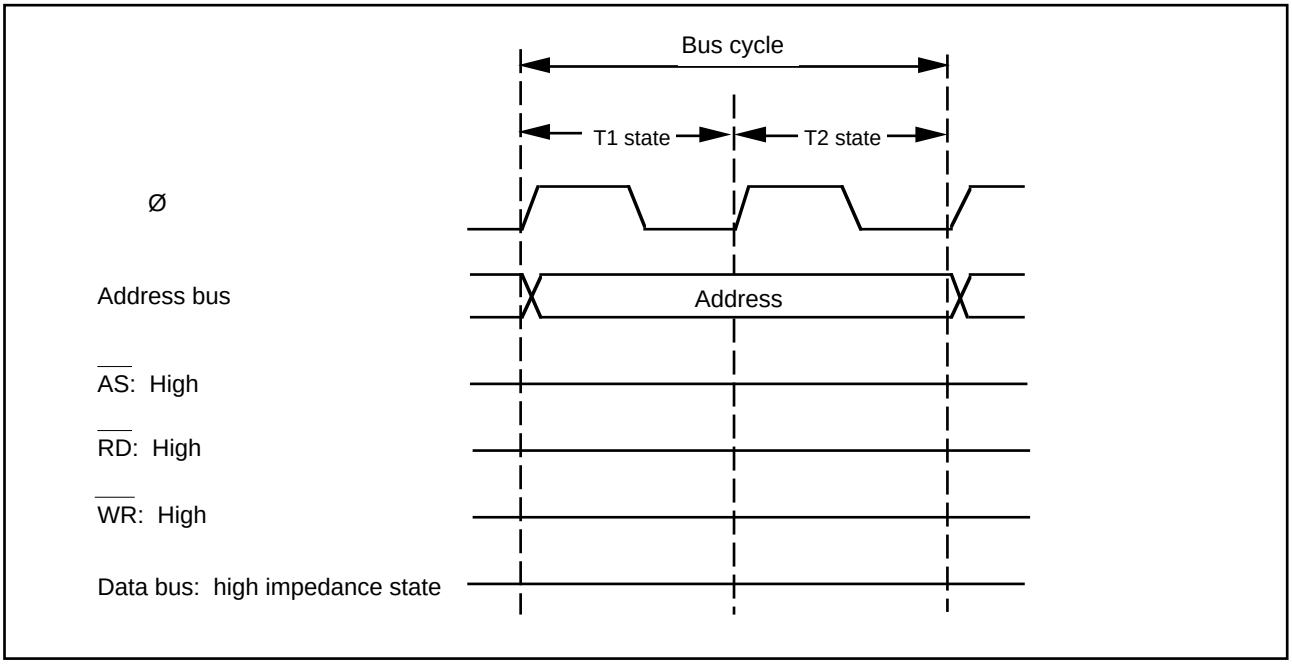

Figure 3-14. Pin States during On-Chip Memory Access Cycle

3.7.2 Access to On-Chip Register Field and External Devices

The on-chip register field (I/O ports, on-chip supporting module registers, etc.) and external devices are accessed in a cycle consisting of three states: T_1, T_2, and T_3. Only one byte of data can be accessed per cycle, via an 8-bit data bus. Access to word data or instruction codes requires two consecutive cycles (six states).

Figure 3-15 shows the access cycle for the on-chip register field. Figure 3-16 shows the associated pin states. Figures 3-17 (a) and (b) show the read and write access timing for external devices.

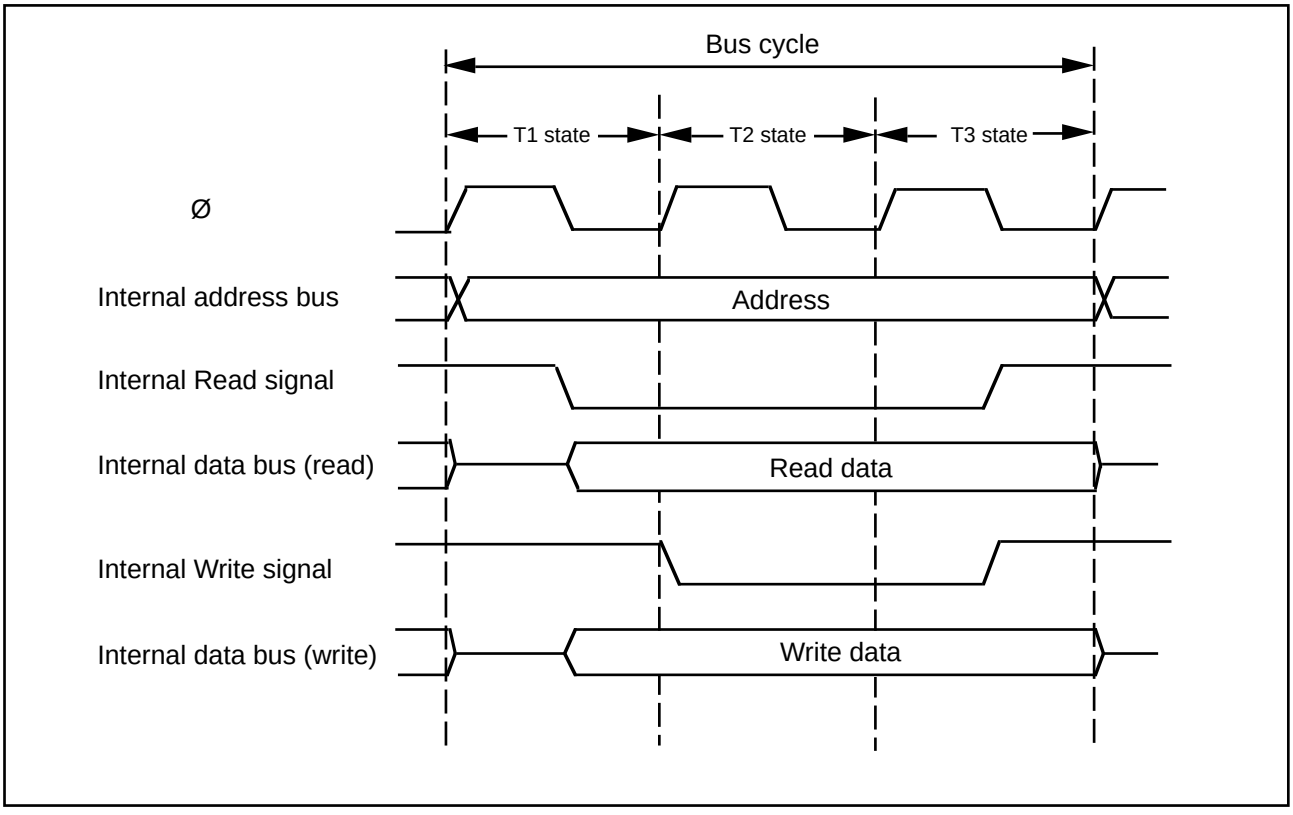

Figure 3-15. On-Chip Register Field Access Cycle

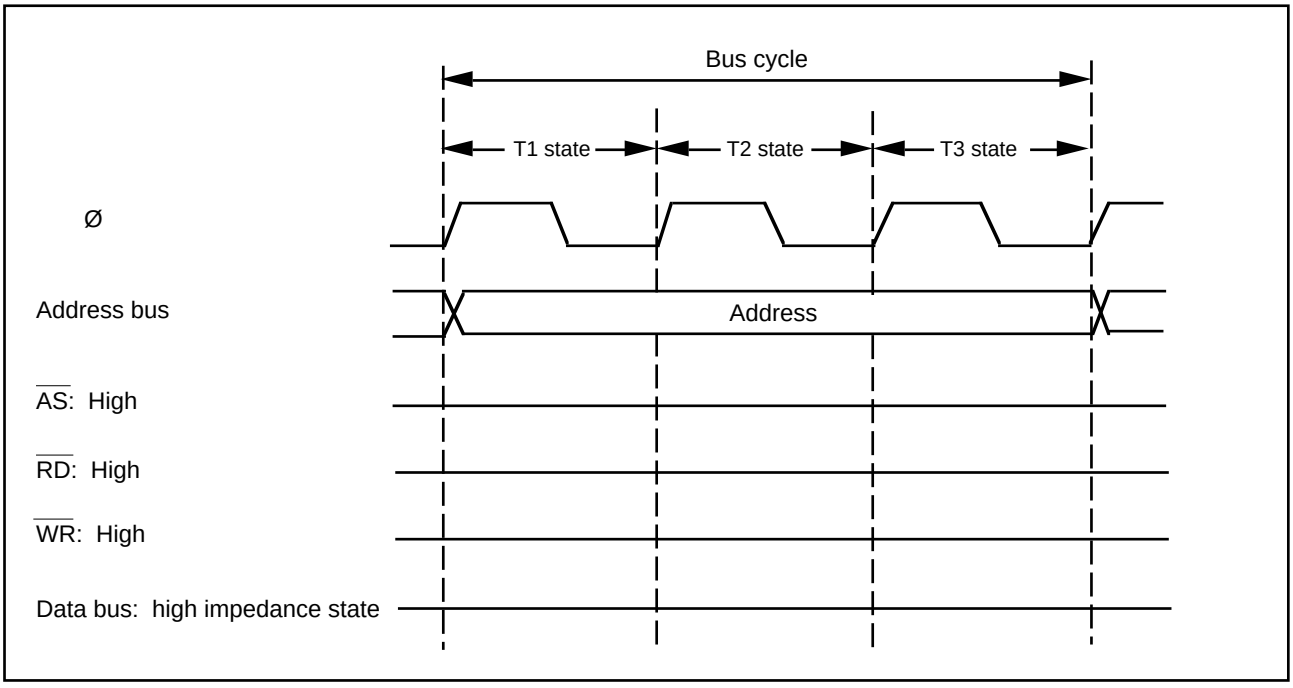

Figure 3-16. Pin States during On-Chip Register Field Access Cycle

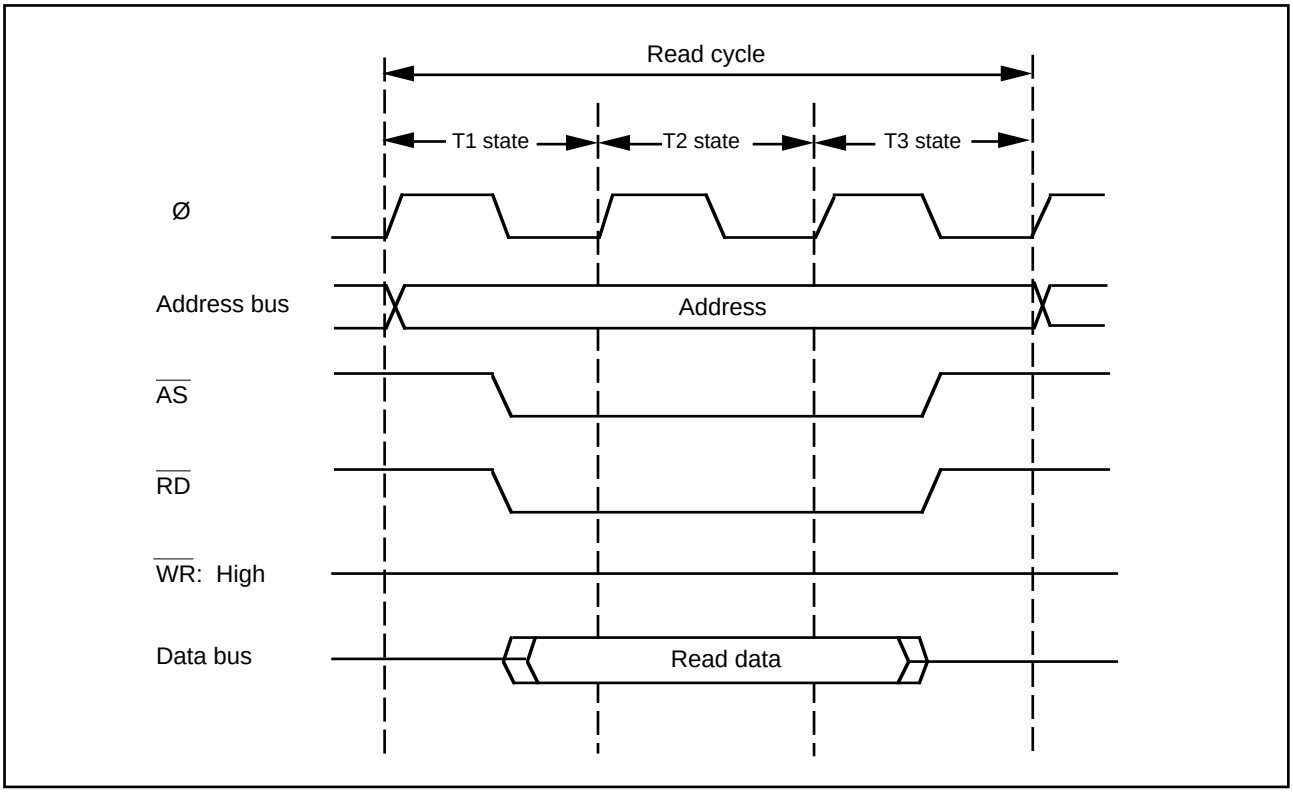

Figure 3-17 (a). External Device Access Timing (Read)

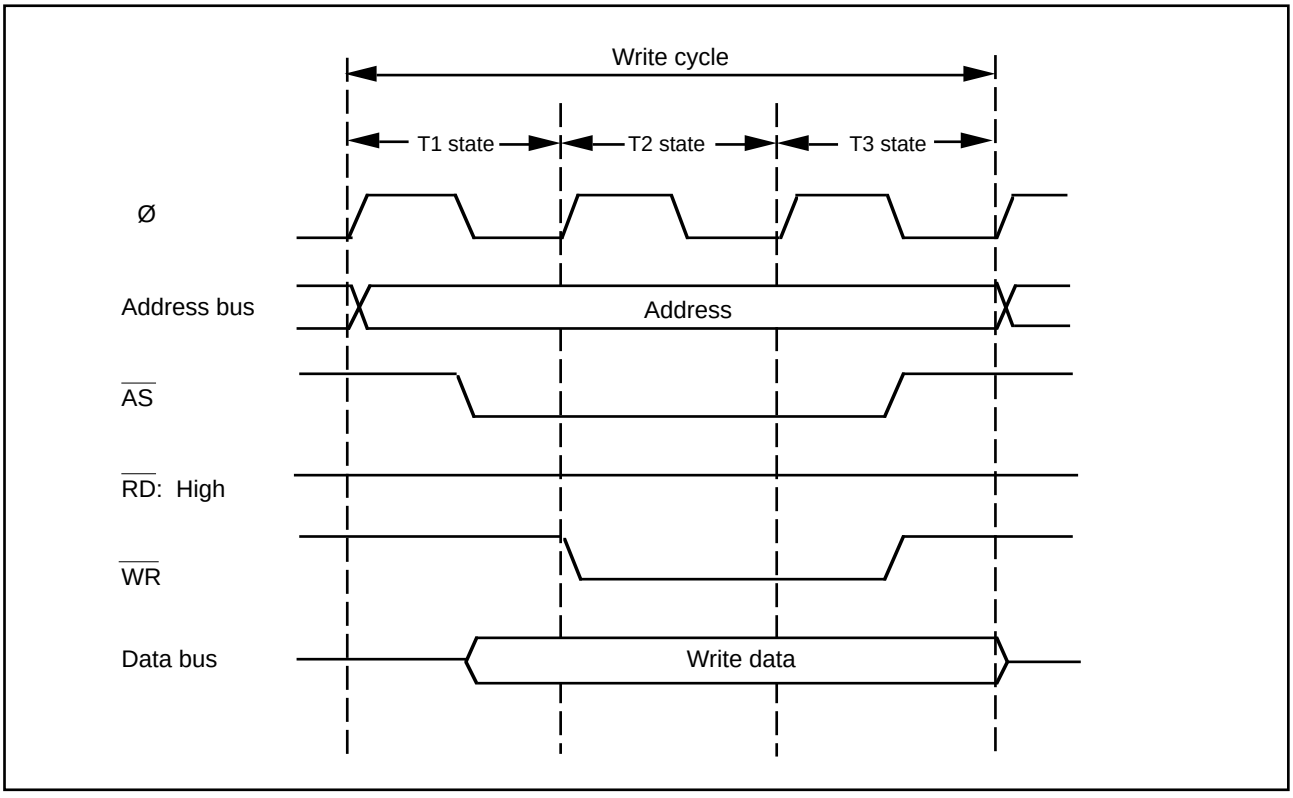

Figure 3-17 (b). External Device Access Timing (Write)

Section 4. Exception Handling

4.1 Overview

The H8/329 Series recognizes only two kinds of exceptions: interrupts and the reset. Table 4-1 indicates their priority and the timing of their hardware exception-handling sequences.

Table 4-1. Hardware Exception-Handling Sequences and Priority

Priority	Type of exception	Timing of exception-handling sequence
High	Reset	The hardware exception-handling sequence begins as soon as $\overline{\text{RES}}$ changes from Low to High.
↕	Interrupt	When an interrupt is requested, the hardware exception-handling sequence begins at the end of the current instruction, or at the end of the current hardware exception-handling sequence.
Low		

4.2 Reset

4.2.1 Overview

A reset has the highest exception-handling priority. When the $\overline{\text{RES}}$ pin goes Low, all current processing stops and the chip enters the reset state. The internal state of the CPU and the registers of the on-chip supporting modules are initialized. When $\overline{\text{RES}}$ returns from Low to High, the reset exception-handling sequence starts.

4.2.2 Reset Sequence

The reset state begins when $\overline{\text{RES}}$ goes Low. To ensure correct resetting, at power-on the $\overline{\text{RES}}$ pin should be held Low for at least 20ms. In a reset during operation, the $\overline{\text{RES}}$ pin should be held Low for at least 10 system clock cycles. For the pin states during a reset, see appendix C, “Pin States.”

When $\overline{\text{RES}}$ returns from Low to High, hardware carries out the following reset exception-handling sequence.

(1) The internal state of the CPU and the registers of the on-chip supporting modules are initialized, and the I bit in the condition code register (CCR) is set to “1.”

(2) The CPU loads the program counter with the first word in the vector table (stored at addresses H'0000 and H'0001) and starts program execution.

The $\overline{\text{RES}}$ pin should be held Low when power is switched off, as well as when power is switched on.

Figure 4-1 indicates the timing of the reset sequence in modes 2 and 3. Figure 4-2 indicates the timing in mode 1.

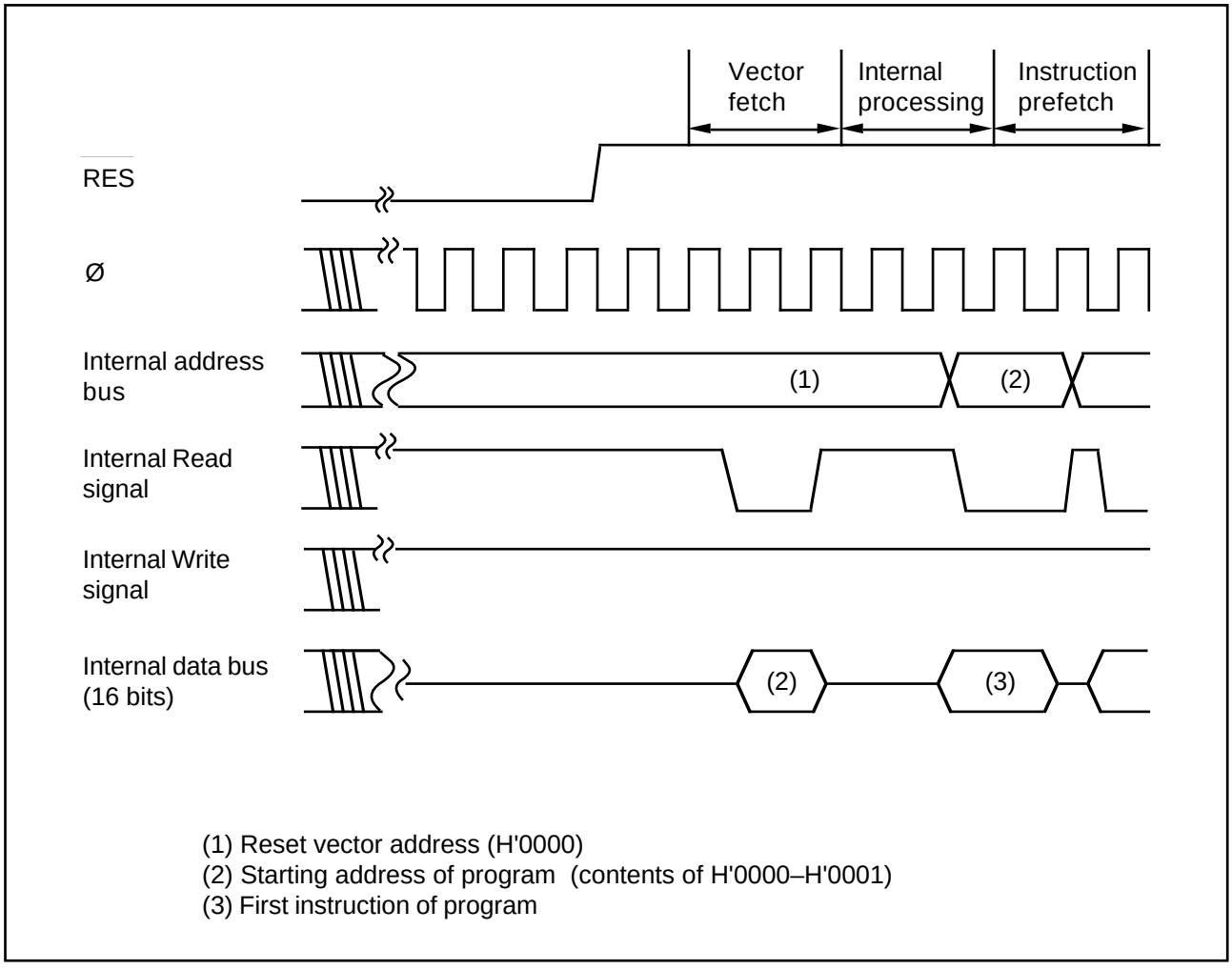

Figure 4-1. Reset Sequence (Mode 2 or 3, Program Stored in On-Chip ROM)

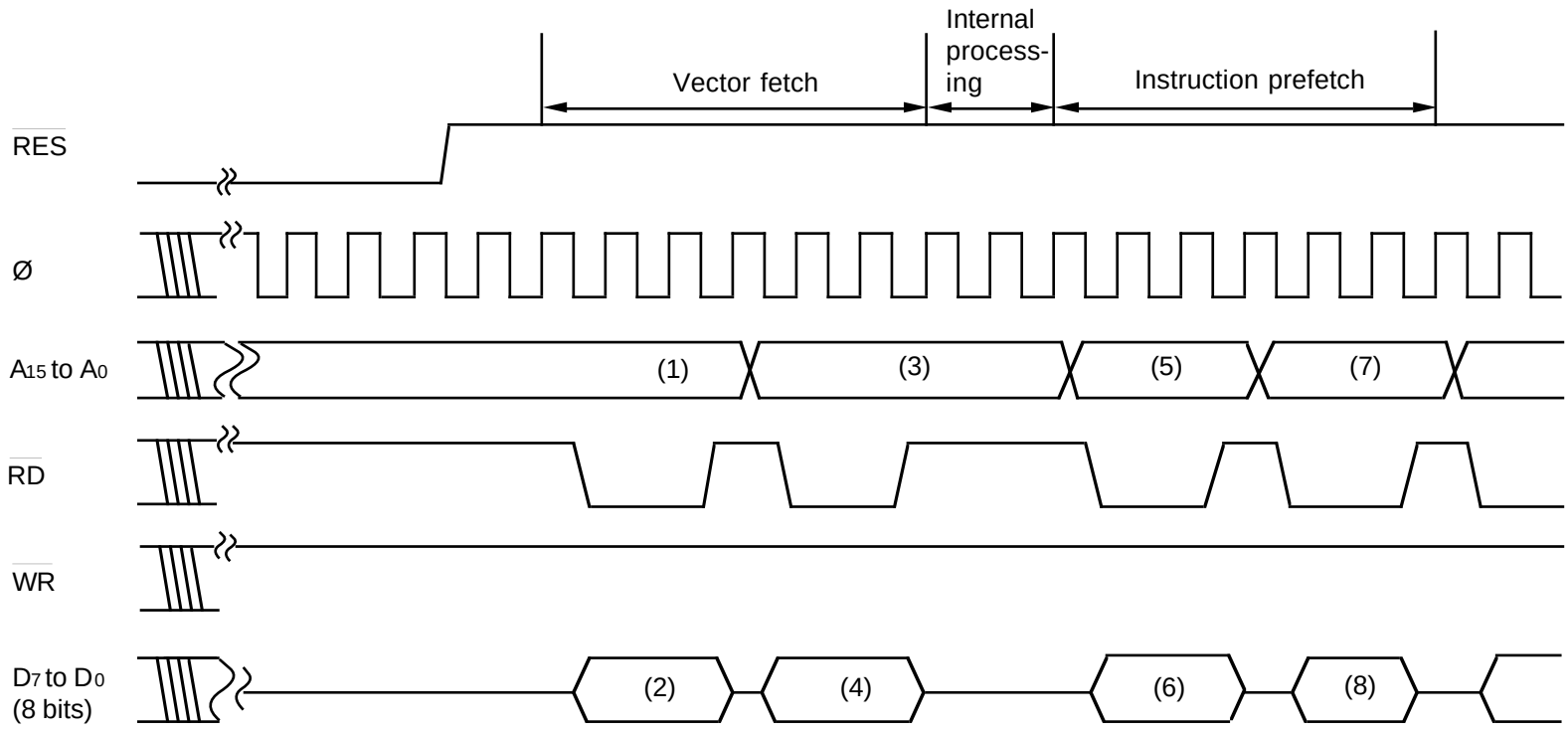

(1),(3) Reset vector address: (1)=H'0000, (3)=H'0001

(2),(4) Starting address of program (contents of reset vector): (2)=upper byte, (4)=lower byte

(5),(7) Starting address of program: (5)=(2)(4), (7)=(2)(4)+1

(6),(8) First instruction of program: (6)=first byte, (8)=second byte

Figure 4-2. Reset Sequence (Mode 1)

4.2.3 Disabling of Interrupts after Reset

After a reset, if an interrupt were to be accepted before initialization of the stack pointer (SP: R7), the program counter and condition code register might not be saved correctly, leading to a program crash. To prevent this, all interrupts, including NMI, are disabled immediately after a reset. The first program instruction is therefore always executed. This instruction should initialize the stack pointer (example: MOV.W #xx:16, SP).

4.3 Interrupts

4.3.1 Overview

The interrupt sources include four input pins for external interrupts (NMI, IRQ_0 to IRQ_2) and 18 internal sources in the on-chip supporting modules. Table 4-2 lists the interrupt sources in priority order and gives their vector addresses. When two or more interrupts are requested, the interrupt with highest priority is served first.

The features of these interrupts are:

- NMI has the highest priority and is always accepted. All internal and external interrupts except NMI can be masked by the I bit in the CCR. When the I bit is set to “1,” interrupts other than NMI are not accepted.
- IRQ_0 to IRQ_2 can be sensed on the falling edge of the input signal, or level-sensed. The type of sensing can be selected for each interrupt individually. NMI is edge-sensed, and either the rising or falling edge can be selected.
- All interrupts are individually vectored. The software interrupt-handling routine does not have to determine what type of interrupt has occurred.

Table 4-2. Interrupts

Interrupt source		No.	Address of entry in vector table			Priority
NMI		3	H'0006	–	H'0007	High
IRQ_0		4	H'0008	–	H'0009	↑
IRQ_1		5	H'000A	–	H'000B	
IRQ_2		6	H'000C	–	H'000D	
Reserved		7	H'000E	–	H'000F	
		8	H'0010	–	H'0011	
		9	H'0012	–	H'0013	
		10	H'0014	–	H'0015	
		11	H'0016	–	H'0017	
16-Bit free-running timer	ICIA (Input capture A)	12	H'0018	–	H'0019	
	ICIB (Input capture B)	13	H'001A	–	H'001B	
	ICIC (Input capture C)	14	H'001C	–	H'001D	
	ICID (Input capture D)	15	H'001E	–	H'001F	
	OCIA (Output compare A)	16	H'0020	–	H'0021	
	OCIB (Output compare B)	17	H'0022	–	H'0023	
	FOVI (Overflow)	18	H'0024	–	H'0025	
8-Bit timer 0	CMI0A (Compare-match A)	19	H'0026	–	H'0027	
	CMI0B (Compare-match B)	20	H'0028	–	H'0029	
	OVI0 (Overflow)	21	H'002A	–	H'002B	
8-Bit timer 1	CMI1A (Compare-match A)	22	H'002C	–	H'002D	
	CMI1B (Compare-match B)	23	H'002E	–	H'002F	
	OVI1 (Overflow)	24	H'0030	–	H'0031	
Reserved		25	H'0032	–	H'0033	
		26	H'0034	–	H'0035	
Serial communication interface	ERI (Receive error)	27	H'0036	–	H'0037	
	RXI (Receive end)	28	H'0038	–	H'0039	
	TXI (TDR empty)	29	H'003A	–	H'003B	
	TEI (TSR empty)	30	H'003C	–	H'003D	
Reserved		31	H'003E	–	H'003F	
		32	H'0040	–	H'0041	
		33	H'0042	–	H'0043	
		34	H'0044	–	H'0045	↓
A/D converter	ADI (Conversion end)	35	H'0046	–	H'0047	Low

Notes: 1. H'0000 and H'0001 contain the reset vector.
2. H'0002 to H'0005 are reserved in the H8/329 Series and are not available to the user.

4.3.2 Interrupt-Related Registers

The interrupt-related registers are the system control register (SYSCR), IRQ sense control register (ISCR), and IRQ enable register (IER).

Table 4-3. Registers Read by Interrupt Controller

Name	Abbreviation	Read/Write	Address
System control register	SYSCR	R/W	H'FFC4
IRQ sense control register	ISCR	R/W	H'FFC6
IRQ enable register	IER	R/W	H'FFC7

System Control Register (SYSCR)—H'FFC4

Bit	7	6	5	4	3	2	1	0
	SSBY	STS2	STS1	STS0	—	NMIEG	—	RAME
Initial value	0	0	0	0	1	0	1	1
Read/Write	R/W	R/W	R/W	R/W	—	R/W	—	R/W

The valid edge on the $\overline{\text{NMI}}$ line is controlled by bit 2 (NMIEG) in the system control register.

Bit 2—NMI Edge (NMIEG): Determines whether a nonmaskable interrupt is generated on the falling or rising edge of the $\overline{\text{NMI}}$ input signal.

Bit 2

NMIEG	Description	
0	An interrupt is generated on the falling edge of $\overline{\text{NMI}}$.	(Initial state)
1	An interrupt is generated on the rising edge of $\overline{\text{NMI}}$.	

See section 2.2, “System Control Register,” for information on the other SYSCR bits.

IRQ Sense Control Register (ISCR)—H'FFC6

Bit	7	6	5	4	3	2	1	0
	—	—	—	—	—	IRQ_2SC	IRQ_1SC	IRQ_0SC
Initial value	1	1	1	1	1	0	0	0
Read/Write	—	—	—	—	—	R/W	R/W	R/W

Bits 3 to 7—Reserved: These bits cannot be modified and are always read as “1.”

Bits 0 to 2—IRQ$_0$ to IRQ$_2$ Sense Control (IRQ$_0$SC to IRQ$_2$SC): These bits determine whether $\overline{\text{IRQ}_0}$ to $\overline{\text{IRQ}_2}$ are level-sensed or sensed on the falling edge.

Bits 0 to 2

IRQ$_0$SC to IRQ$_2$SC	Description	
0	An interrupt is generated when $\overline{\text{IRQ}_0}$ to $\overline{\text{IRQ}_2}$ inputs are Low.	(Initial state)
1	An interrupt is generated by the falling edge of the $\overline{\text{IRQ}_0}$ to $\overline{\text{IRQ}_2}$ inputs.	

IRQ Enable Register (IER)—H'FFC7

Bit	7	6	5	4	3	2	1	0
	—	—	—	—	—	IRQ$_2$E	IRQ$_1$E	IRQ$_0$E
Initial value	1	1	1	1	1	0	0	0
Read/Write	—	—	—	—	—	R/W	R/W	R/W

Bits 3 to 7—Reserved: These bits cannot be modified and are always read as “1.”

Bits 0 to 2—IRQ$_0$ to IRQ$_2$ Enable (IRQ$_0$E to IRQ$_2$E): These bits enable or disable the IRQ$_0$ to IRQ$_2$ interrupts individually.

Bits 0 to 2

IRQ$_0$E to IRQ$_2$E	Description	
0	IRQ$_0$ to IRQ$_2$ interrupt requests are disabled.	(Initial state)
1	IRQ$_0$ to IRQ$_2$ interrupt requests are enabled.	

When edge sensing is selected (by setting bits IRQ$_0$SC to IRQ$_7$SC to “1”), it is possible for an interrupt-handling routine to be executed even though the corresponding enable bit (IRQ$_0$E to IRQ$_7$E) is cleared to “0” and the interrupt is disabled. If an interrupt is requested while the enable bit (IRQ$_0$E to IRQ$_7$E) is set to “1,” the request will be held pending until served. If the enable bit is cleared to “0” while the request is still pending, the request will remain pending, although new requests will not be recognized. If the interrupt mask bit (I) in the CCR is cleared to “0,” the interrupt-handling routine can be executed even though the enable bit is now “0.”

If execution of interrupt-handling routines under these conditions is not desired, it can be avoided by using the following procedure to disable and clear interrupt requests.

1. Set the I bit to “1” in the CCR, masking interrupts. Note that the I bit is set to 1 automatically when execution jumps to an interrupt vector.
2. Clear the desired bits from IRQ_0E to IRQ_7E to “0” to disable new interrupt requests.
3. Clear the corresponding IRQ_0SC to IRQ_7SC bits to “0,” then set them to “1” again. Pending IRQ_n interrupt requests are cleared when I = “1” in the CCR, IRQ_nSC = “0,” and IRQ_nE = “0.”

4.3.3 External Interrupts

The external interrupts are NMI and IRQ_0 to IRQ_2. These four interrupts can be used to recover from software standby mode.

(1) NMI: A nonmaskable interrupt is generated on the rising or falling edge of the $\overline{NMI}$ input signal regardless of whether the I (interrupt mask) bit is set in the CCR. The valid edge is selected by the NMIEG bit in the system control register. The NMI vector number is 3. In the NMI hardware exception-handling sequence the I bit in the CCR is set to “1.”

(2) IRQ_0 to IRQ_2: These interrupt signals are level-sensed or sensed on the falling edge of the input, as selected by ISCR bits IRQ_0SC to IRQ_2SC. These interrupts can be masked collectively by the I bit in the CCR, and can be enabled and disabled individually by setting and clearing bits IRQ_0E to IRQ_2E in the IRQ enable register.

When one of these interrupts is accepted, the I bit is set to “1.” IRQ_0 to IRQ_2 have interrupt vector numbers 4 to 6. They are prioritized in order from IRQ_2 (Low) to IRQ_0 (High). For details, see table 4-2.

Interrupts IRQ_0 to IRQ_2 do not depend on whether pins $\overline{IRQ_0}$ to $\overline{IRQ_2}$ are input or output pins. When using external interrupts IRQ_0 to IRQ_2, clear the corresponding DDR bits to “0” to set these pins to the input state, and do not use these pins for input to the A/D converter.

4.3.4 Internal Interrupts

Eighteen internal interrupts can be requested by the on-chip supporting modules. Each interrupt source has its own vector number, so the interrupt-handling routine does not have to determine which interrupt has occurred. All internal interrupts are masked when the I bit in the CCR is set to "1." When one of these interrupts is accepted, the I bit is set to 1 to mask further interrupts (except $\overline{\text{NMI}}$). The vector numbers are 12 to 35. For the priority order, see table 4-2.

4.3.5 Interrupt Handling

Interrupts are controlled by an interrupt controller that arbitrates between simultaneous interrupt requests, commands the CPU to start the hardware interrupt exception-handling sequence, and furnishes the necessary vector number. Figure 4-3 shows a block diagram of the interrupt controller.

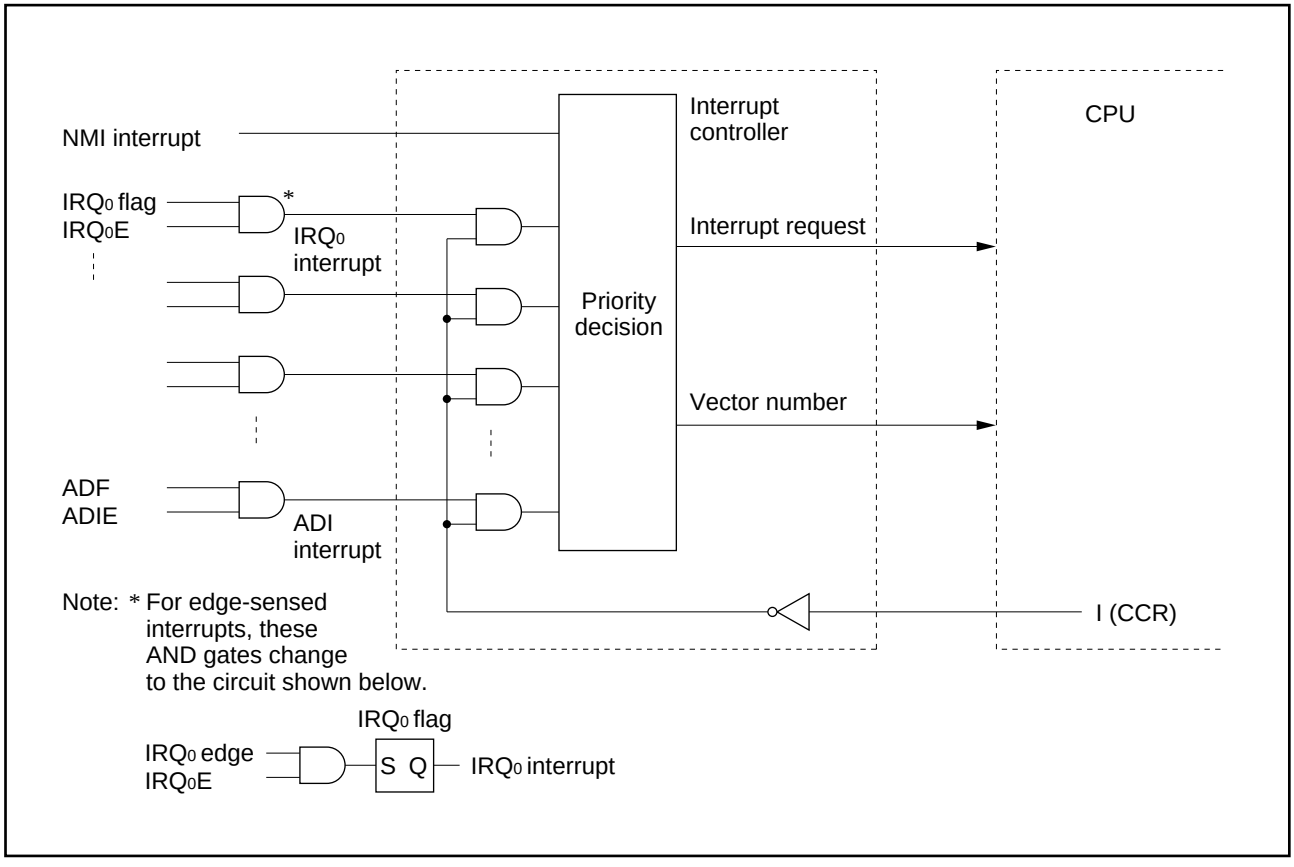

Figure 4-3. Block Diagram of Interrupt Controller

The IRQ interrupts and interrupts from the on-chip supporting modules all have corresponding enable bits. When the enable bit is cleared to “0,” the interrupt signal is not sent to the interrupt controller, so the interrupt is ignored. These interrupts can also all be masked by setting the CPU’s interrupt mask bit (I) to “1.” Accordingly, these interrupts are accepted only when their enable bit is set to “1” and the I bit is cleared to “0.”

The nonmaskable interrupt (NMI) is always accepted, except in the reset state and hardware standby mode.

When an NMI or another enabled interrupt is requested, the interrupt controller transfers the interrupt request to the CPU and indicates the corresponding vector number. (When two or more interrupts are requested, the interrupt controller selects the vector number of the interrupt with the highest priority.) When notified of an interrupt request, at the end of the current instruction or current hardware exception-handling sequence, the CPU starts the hardware exception-handling sequence for the interrupt and latches the vector number.

Figure 4-4 is a flowchart of the interrupt (and reset) operations. Figure 4-6 shows the interrupt timing sequence for the case in which the software interrupt-handling routine is in on-chip ROM and the stack is in on-chip RAM.

(1) An interrupt request is sent to the interrupt controller when an NMI interrupt occurs, and when an interrupt occurs on an IRQ input line or in an on-chip supporting module provided the enable bit of that interrupt is set to “1.”
(2) The interrupt controller checks the I bit in the CCR and accepts the interrupt request if the I bit is cleared to “0.” If the I bit is set to “1” only NMI requests are accepted; other interrupt requests remain pending.
(3) Among all accepted interrupt requests, the interrupt controller selects the request with the highest priority and passes it to the CPU. Other interrupt requests remain pending.
(4) When it receives the interrupt request, the CPU waits until completion of the current instruction or hardware exception-handling sequence, then starts the hardware exception-handling sequence for the interrupt and latches the interrupt vector number.
(5) In the hardware exception-handling sequence, the CPU first pushes the PC and CCR onto the stack. See figure 4-5. The stacked PC indicates the address of the first instruction that will be executed on return from the software interrupt-handling routine.
(6) Next the I bit in the CCR is set to “1,” masking all further interrupts except NMI.
(7) The vector address corresponding to the vector number is generated, the vector table entry at this vector address is loaded into the program counter, and execution branches to the software interrupt-handling routine at the address indicated by that entry.

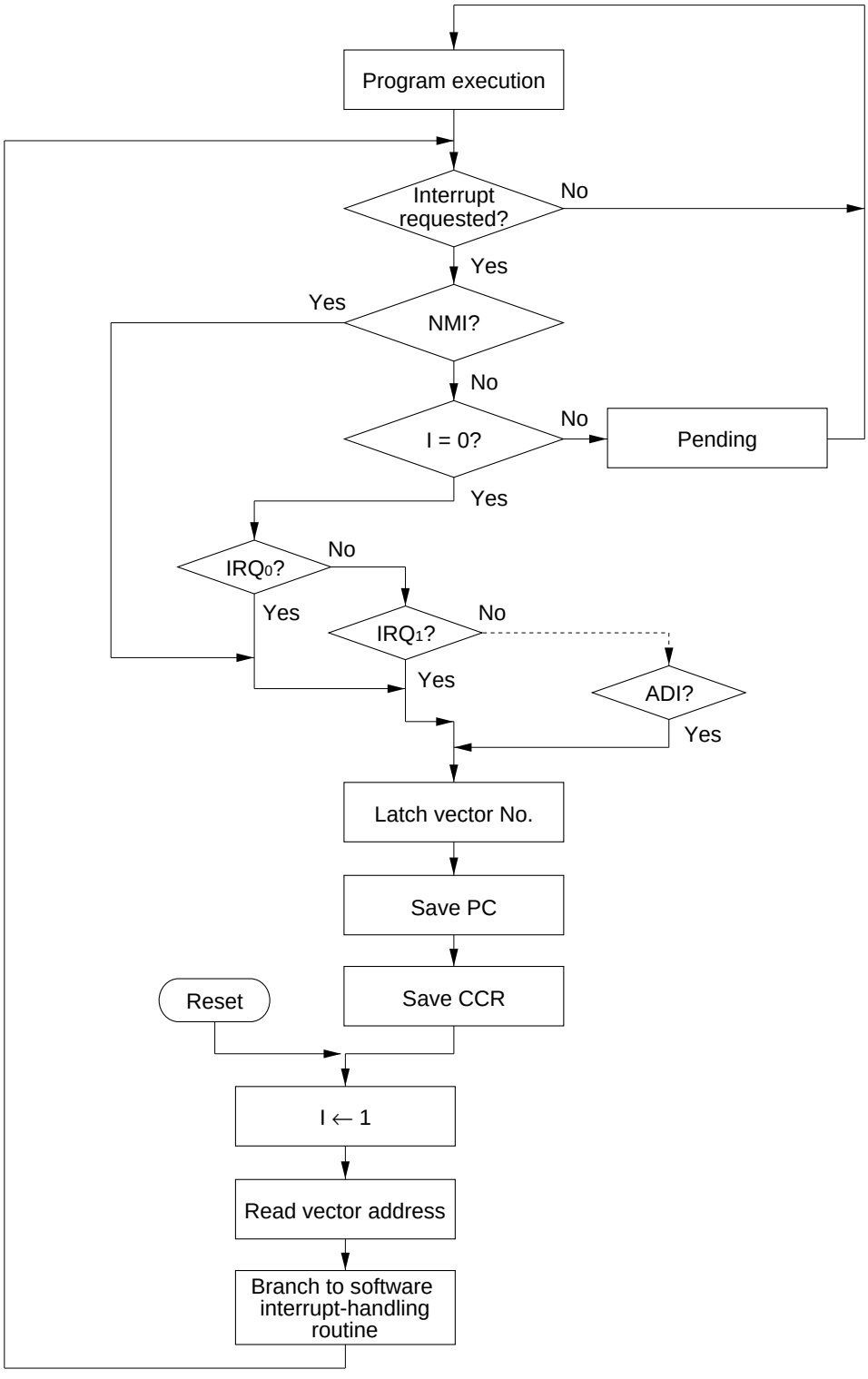

Figure 4-4. Hardware Interrupt-Handling Sequence

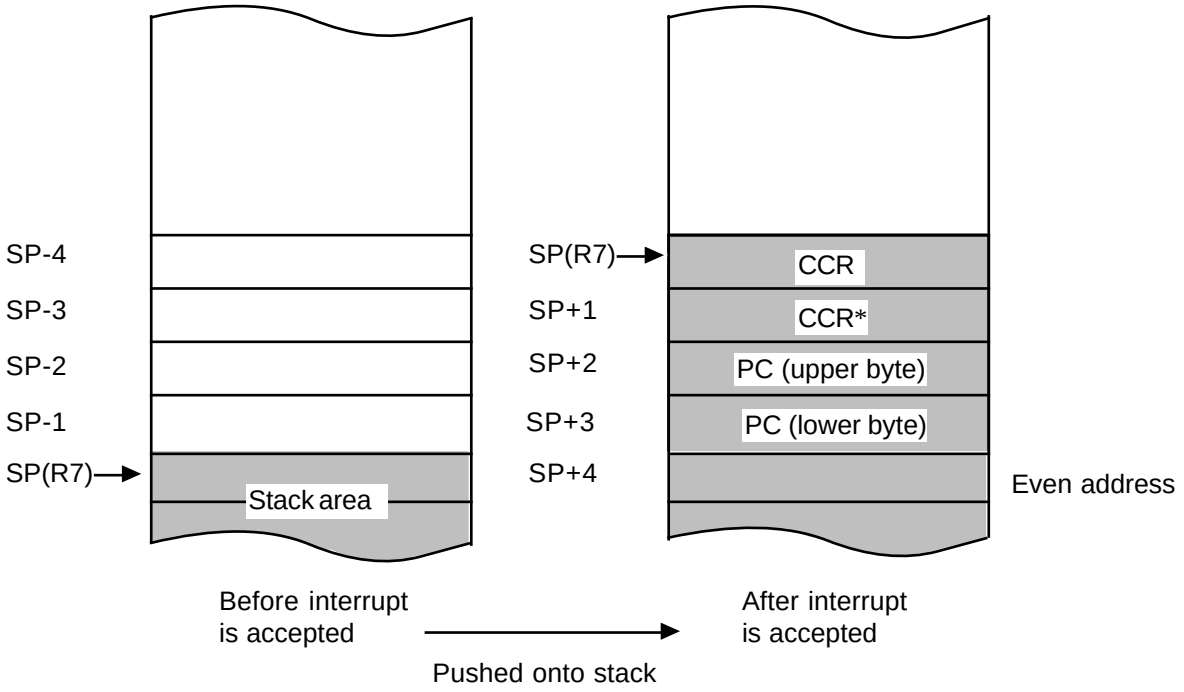

PC: Program counter
CCR: Condition code register
SP: Stack pointer

Notes: 1. The PC contains the address of the first instruction executed after return.
2. Registers must be saved and restored by word access at an even address.

* Ignored on return.

Figure 4-5. Usage of Stack in Interrupt Handling

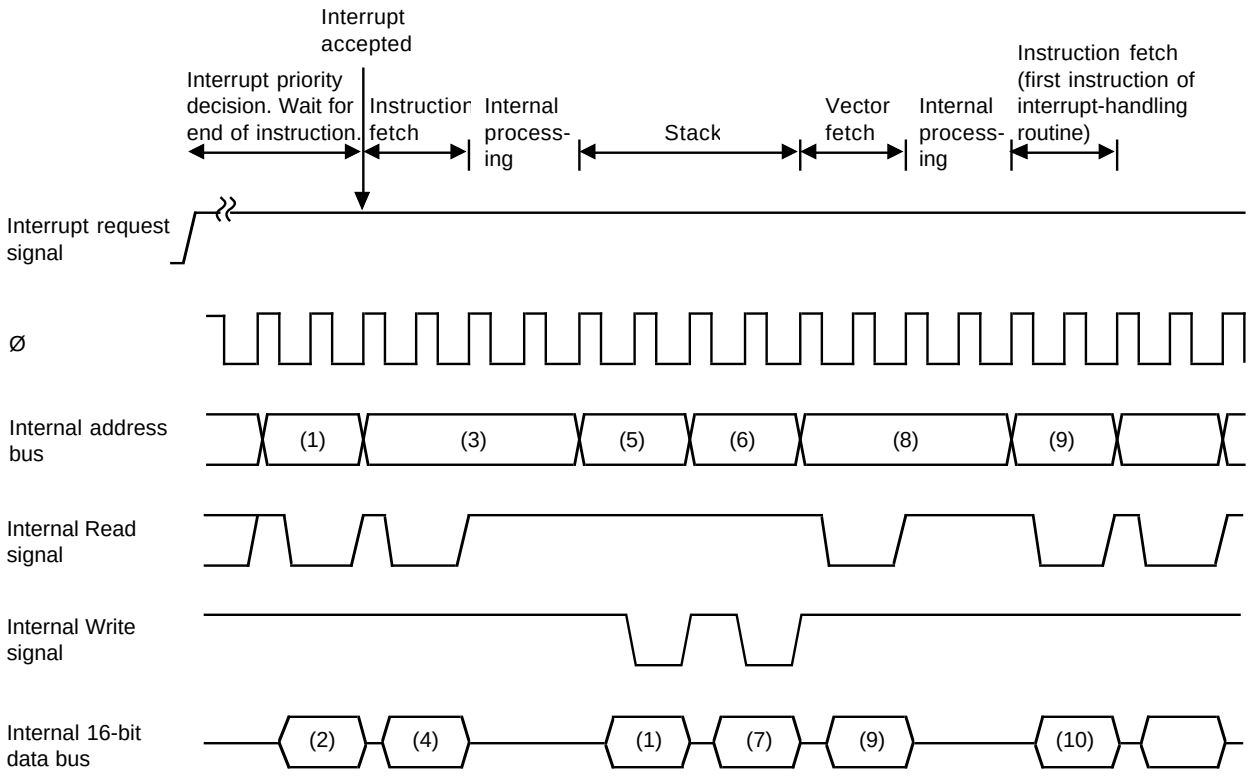

(1) Instruction prefetch address (Pushed on stack. Instruction is executed on return from interrupt-handling routine.)
(2) (4) Instruction code (Not executed)
(3) Instruction prefetch address (Not executed)
(5) SP–2
(6) SP–4
(7) CCR
(8) Address of vector table entry
(9) Vector table entry (address of first instruction of interrupt-handling routine)
(10) First instruction of interrupt-handling routine

Figure 4-6. Timing of Interrupt Sequence

4.3.6 Interrupt Response Time

Table 4-4 indicates the number of states that elapse from an interrupt request signal until the first instruction of the software interrupt-handling routine is executed. Since the H8/329 Series accesses its on-chip memory 16 bits at a time, very fast interrupt service can be obtained by placing interrupt-handling routines in on-chip ROM and the stack in on-chip RAM.

Table 4-4. Number of States before Interrupt Service

		Number of states	
No.	**Reason for wait**	**On-chip memory**	**External memory**
1	Interrupt priority decision	2*3	2*3
2	Wait for completion of current instruction*1	1 to 13	5 to 17*2
3	Save PC and CCR	4	12*2
4	Fetch vector	2	6*2
5	Fetch instruction	4	12*2
6	Internal processing	4	4
	Total	17 to 29	41 to 53 *2

Notes: *1 These values do not apply if the current instruction is EEPMOV.
*2 If wait states are inserted in external memory access, add the number of wait states.
*3 1 for internal interrupts.

4.3.7 Precaution

Note that the following type of contention can occur in interrupt handling.

Contention between Interrupt Request and Disable: When software clears the enable bit of an interrupt to “0” to disable the interrupt, the interrupt becomes disabled after execution of the clearing instruction. If an enable bit is cleared by a BCLR or MOV instruction, for example, and the interrupt is requested during execution of that instruction, at the instant when the instruction ends the interrupt is still enabled, so after execution of the instruction, the hardware exception-handling sequence is executed for the interrupt. If a higher-priority interrupt is requested at the same time, however, the hardware exception-handling sequence is executed for the higher-priority interrupt and the interrupt that was disabled is ignored.

Similar considerations apply when an interrupt request flag is cleared to “0.”

Figure 4-7 shows an example in which the OCIAE bit is cleared to “0.”

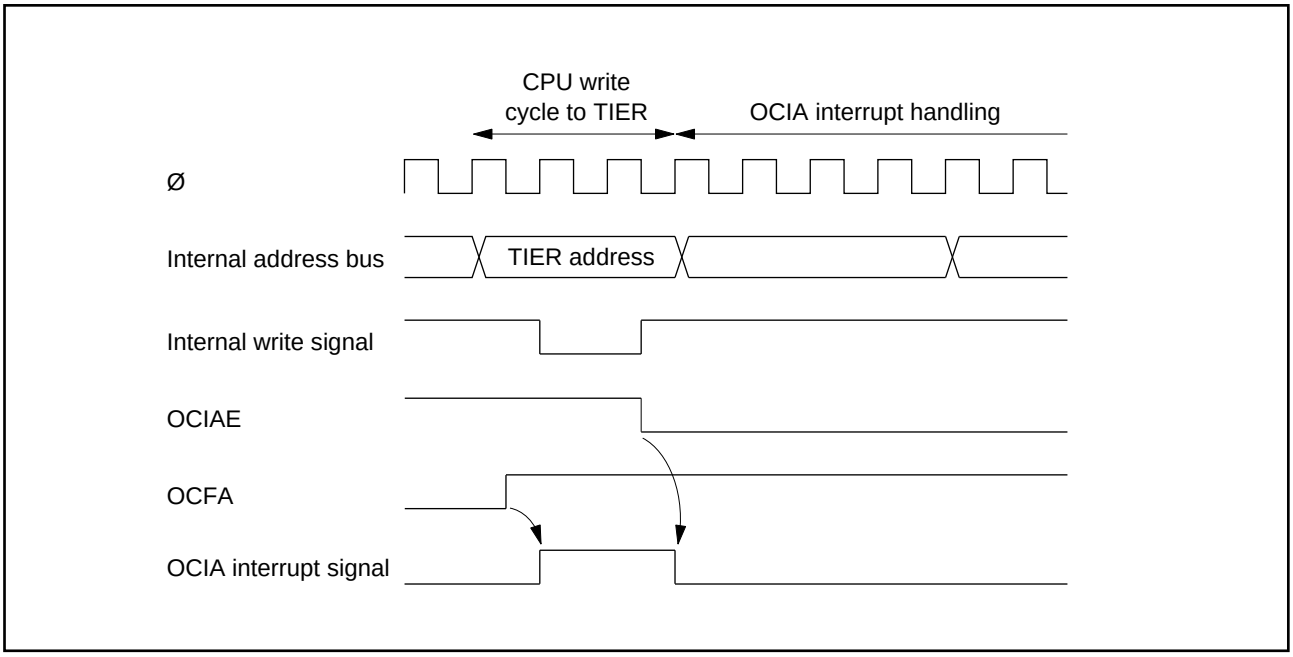

Figure 4-7. Contention between Interrupt and Disabling Instruction

The above contention does not occur if the enable bit or flag is cleared to “0” while the interrupt mask bit (I) is set to “1.”

4.4 Note on Stack Handling

In word access, the least significant bit of the address is always assumed to be 0. The stack is always accessed by word access. Care should be taken to keep an even value in the stack pointer (general register R7). Use the PUSH and POP (or MOV.W Rn, @–SP and MOV.W @SP+, Rn) instructions to push and pop registers on the stack.

Setting the stack pointer to an odd value can cause programs to crash. Figure 4-8 shows an example of damage caused when the stack pointer contains an odd address.

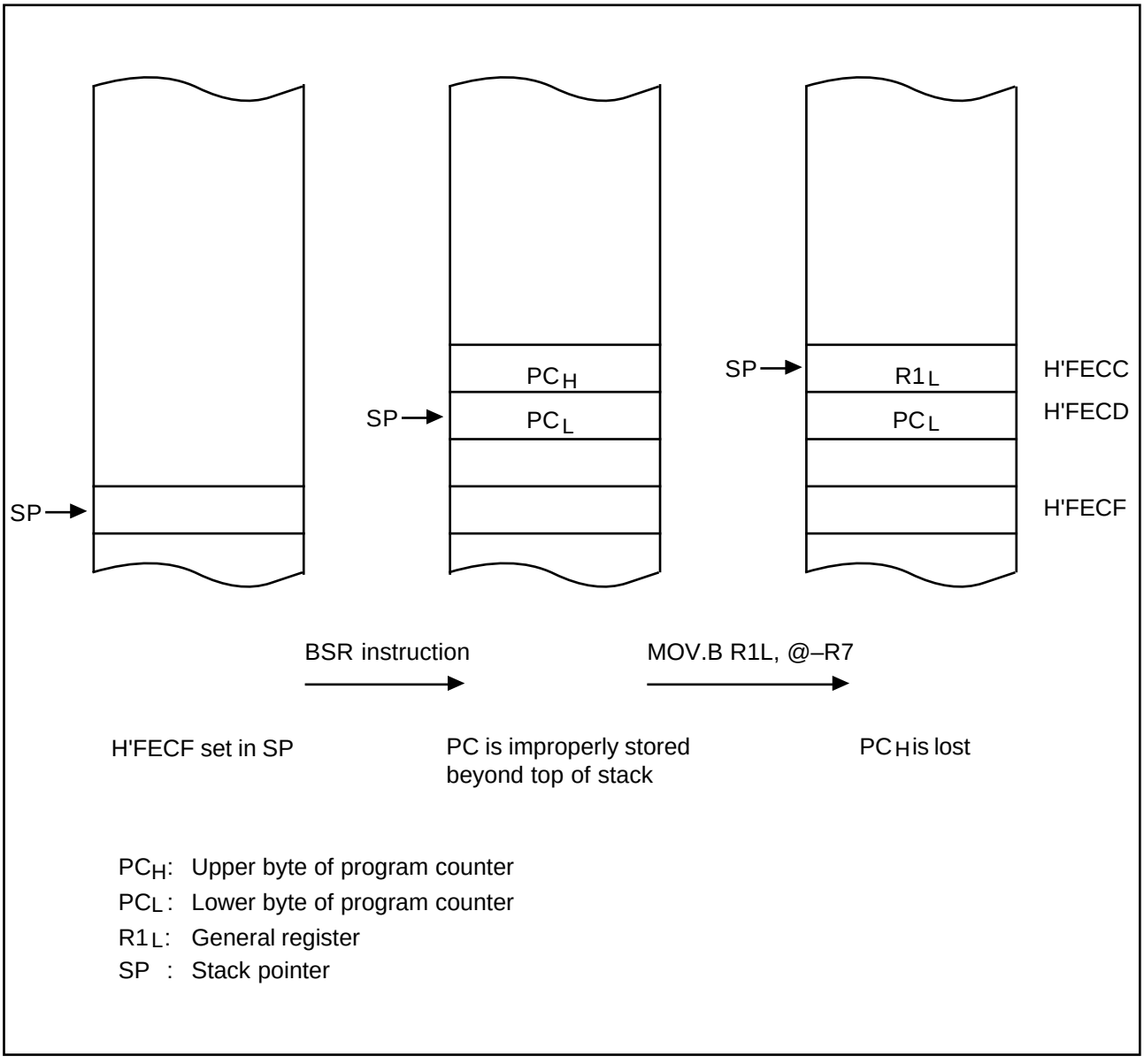

Figure 4-8. Example of Damage Caused by Setting an Odd Address in R7

Although the CCR consists of only one byte, it is treated as word data when pushed on the stack. In the hardware interrupt exception-handling sequence, two identical CCR bytes are pushed onto the stack to make a complete word. When popped from the stack by an RTE instruction, the CCR is loaded from the byte stored at the even address. The byte stored at the odd address is ignored.

Section 5. I/O Ports

5.1 Overview

The H8/329 Series has seven parallel I/O ports, including:

- Five 8-bit input/output ports—ports 1, 2, 3, 4, and 6
- One 8-bit input port—port 7
- One 3-bit input/output port—port 5

Ports 1, 2, and 3 have programmable input pull-up transistors. Ports 1 to 6 can drive a Darlington pair. Ports 1 to 4, and 6 can drive one TTL load and a 90pF capacitive load. Port 5 can drive one TTL load and a 30pF capacitive load. Ports 1 and 2 can drive LEDs (10mA current sink).

Input and output are memory-mapped. The CPU views each port as a data register (DR) located in the register field at the high end of the address space. Each port (except port 7) also has a data direction register (DDR) which determines which pins are used for input and which for output.

Output: To send data to an output port, the CPU selects output in the data direction register and writes the desired data in the data register, causing the data to be held in a latch. The latch output drives the pin through a buffer amplifier. If the CPU reads the data register of an output port, it obtains the data held in the latch rather than the actual level of the pin.

Input: To read data from an I/O port, the CPU selects input in the data direction register and reads the data register. This causes the input logic level at the pin to be placed directly on the internal data bus. There is no intervening input latch.

The data direction registers are write-only registers; their contents are invisible to the CPU. If the CPU reads a data direction register all bits are read as “1,” regardless of their true values. Care is required if bit manipulation instructions are used to set and clear the data direction bits. See the note on bit manipulation instructions in section 3.5.5, “Bit Manipulations.”

Auxiliary Functions: In addition to their general-purpose input/output functions, all of the I/O ports have auxiliary functions. Most of the auxiliary functions are software-selectable and must be enabled by setting bits in control registers. When selected, an auxiliary function usually replaces the general-purpose input/output function, but in some cases both functions can operate simultaneously. Table 5-1 summarizes the functions of the ports.

Table 5-1. Port Functions

Port	Description	Pins	Expanded modes Mode 1	Expanded modes Mode 2	Single-chip mode Mode 3
Port 1	• 8-bit input-output port • Can drive LEDs • Input pull-ups	$P1_7$ to $P1_0$/ A_7 to A_0	Address output (low)	General input when DDR = “0” (initial state) Address output (low) when DDR = “1”	General input/ output
Port 2	• 8-bit input-output port • Can drive LEDs • Input pull-ups	$P2_7$ to $P2_0$/ A_{15} to A_8	Address output (high)	General input when DDR = “0” (initial state) Address output (high) when DDR = “1”	General input/ output
Port 3	• 8-bit input-output port • Input pull-ups	$P3_7$ to $P3_0$/ D_7 to D_0	Data bus	Data bus	General input/ output
Port 4	• 8-bit input/output	$P4_7/\overline{WAIT}$	$\overline{WAIT}$ input		General input/ output
		$P4_6$/Ø	System clock output		General input when DDR = “0” (initial state) System clock output when DDR = “1”
		$P4_5/\overline{AS}$	$\overline{AS}$ output		General input/ output
		$P4_4/\overline{WR}$	$\overline{WR}$ output		
		$P4_3/\overline{RD}$	$\overline{RD}$ output		
		$P4_2/\overline{IRQ_0}$ $P4_1/\overline{IRQ_1}$	General input/output or external interrupt input ($\overline{IRQ_0}$, $\overline{IRQ_1}$)		
		$P4_0/\overline{ADTRG}$/ $\overline{IRQ_2}$	General input/output, A/D converter trigger input ($\overline{ADTRG}$), or external interrupt input ($\overline{IRQ_2}$)		
Port 5	• 3-bit input-output port	$P5_2$ to $P5_0$	General input/output or serial communication interface input/output (TxD, RxD, SCK)		
Port 6	• 8-bit input-output port	$P6_7$ to $P6_0$	General input/output, 16-bit free-running timer input/output (FTCI, FTOA, FTOB, FTIA, FTIB, FTIC, FTID), or 8-bit timer 0/1 input/output ($TMCI_0$, TMO_0, $TMRI_0$, $TMCI_1$, TMO_1, $TMRI_1$)		
Port 7	• 8-bit input port	$P7_7$ to $P7_0$	General input, or analog input to A/D converter		

5.2 Port 1

Port 1 is an 8-bit input/output port that also provides the low bits of the address bus. The function of port 1 depends on the MCU mode as indicated in table 5-2.

Table 5-2. Functions of Port 1

Mode 1	Mode 2	Mode 3
Address bus (Low) (A_7 to A_0)	Input port or Address bus (Low) (A_7 to A_0)*	Input/output port

Note: * Depending on the bit settings in the data direction register: 0—input pin; 1—address pin

Pins of port 1 can drive a single TTL load and a 90pF capacitive load when they are used as output pins. They can also drive light-emitting diodes and a Darlington pair. When they are used as input pins, they have programmable MOS transistor pull-ups.

Table 5-3 details the port 1 registers.

Table 5-3. Port 1 Registers

Name	Abbreviation	Read/Write	Initial value	Address
Port 1 data direction register	P1DDR	W	H'FF (mode 1) H'00 (modes 2 and 3)	H'FFB0
Port 1 data register	P1DR	R/W	H'00	H'FFB2
Port 1 input pull-up control register	P1PCR	R/W	H'00	H'FFAC

Port 1 Data Direction Register (P1DDR)—H'FFB0

Bit	7	6	5	4	3	2	1	0
	$P1_7DDR$	$P1_6DDR$	$P1_5DDR$	$P1_4DDR$	$P1_3DDR$	$P1_2DDR$	$P1_1DDR$	$P1_0DDR$
Mode 1								
Initial value	1	1	1	1	1	1	1	1
Read/Write	—	—	—	—	—	—	—	—
Modes 2 and 3								
Initial value	0	0	0	0	0	0	0	0
Read/Write	W	W	W	W	W	W	W	W

P1DDR is an 8-bit register that selects the direction of each pin in port 1. A pin functions as an output pin if the corresponding bit in P1DDR is set to “1,” and as an input pin if the bit is cleared to “0.”

Port 1 Data Register (P1DR)—H'FFB2

Bit	7	6	5	4	3	2	1	0
	$P1_7$	$P1_6$	$P1_5$	$P1_4$	$P1_3$	$P1_2$	$P1_1$	$P1_0$
Initial value	0	0	0	0	0	0	0	0
Read/Write	R/W	R/W	R/W	R/W	R/W	R/W	R/W	R/W

P1DR is an 8-bit register containing the data for pins $P1_7$ to $P1_0$. When the CPU reads P1DR, for output pins it reads the value in the P1DR latch, but for input pins, it obtains the logic level directly from the pin, bypassing the P1DR latch.

Port 1 Input Pull-Up Control Register (P1PCR)—H'FFAC

Bit	7	6	5	4	3	2	1	0
	$P1_7$PCR	$P1_6$PCR	$P1_5$PCR	$P1_4$PCR	$P1_3$PCR	$P1_2$PCR	$P1_1$PCR	$P1_0$PCR
Initial value	0	0	0	0	0	0	0	0
Read/Write	R/W	R/W	R/W	R/W	R/W	R/W	R/W	R/W

P1PCR is an 8-bit readable/writable register that controls the input pull-up transistors in port 1. If a bit in P1DDR is cleared to “0” (designating input) and the corresponding bit in P1PCR is set to “1,” the input pull-up transistor for that bit is turned on.

Mode 1: In mode 1 (expanded mode without on-chip ROM), port 1 is automatically used for address output. The port 1 data direction register is unwritable. All bits in P1DDR are automatically set to “1” and cannot be cleared to “0.”

Mode 2: In mode 2 (expanded mode with on-chip ROM), the usage of port 1 can be selected on a pin-by-pin basis. A pin is used for general-purpose input if its data direction bit is cleared to “0,” or for address output if its data direction bit is set to “1.”

Mode 3: In the single-chip mode port 1 is a general-purpose input/output port.

Reset: A reset clears P1DDR, P1DR, and P1PCR to all “0,” placing all pins in the input state with the pull-up transistors off. In mode 1, when the chip comes out of reset, P1DDR is set to all “1.”

Hardware Standby Mode: All pins are placed in the high-impedance state with the pull-up transistors off. P1DR and P1PCR are initialized to H'00. In modes 2 and 3, P1DDR is initialized to H'00.

Software Standby Mode: In the software standby mode, P1DDR, P1DR, and P1PCR remain in their previous state. Address output pins are Low. General-purpose output pins continue to output the data in P1DR.

Input Pull-Up Transistors: Port 1 has built-in programmable input pull-up transistors that are available in modes 2 and 3. The pull-up for each bit can be turned on and off individually. To turn on an input pull-up in mode 2 or 3, set the corresponding P1PCR bit to “1” and clear the corresponding P1DDR bit to “0.” P1PCR is cleared to H'00 by a reset and in the hardware standby mode, turning all input pull-ups off. In software standby mode, the previous state is maintained.

Table 5-4 indicates the states of the input pull-up transistors in each operating mode.

Table 5-4. States of Input Pull-Up Transistors (Port 1)

Mode	Reset	Hardware standby	Software standby	Other operating modes
1	Off	Off	Off	Off
2	Off	Off	On/off	On/off
3	Off	Off	On/off	On/off

Notes: Off: The input pull-up transistor is always off.
On/off: The input pull-up transistor is on if P1PCR = “1” and P1DDR = “0,” but off otherwise.

Figure 5-1 shows a schematic diagram of port 1.

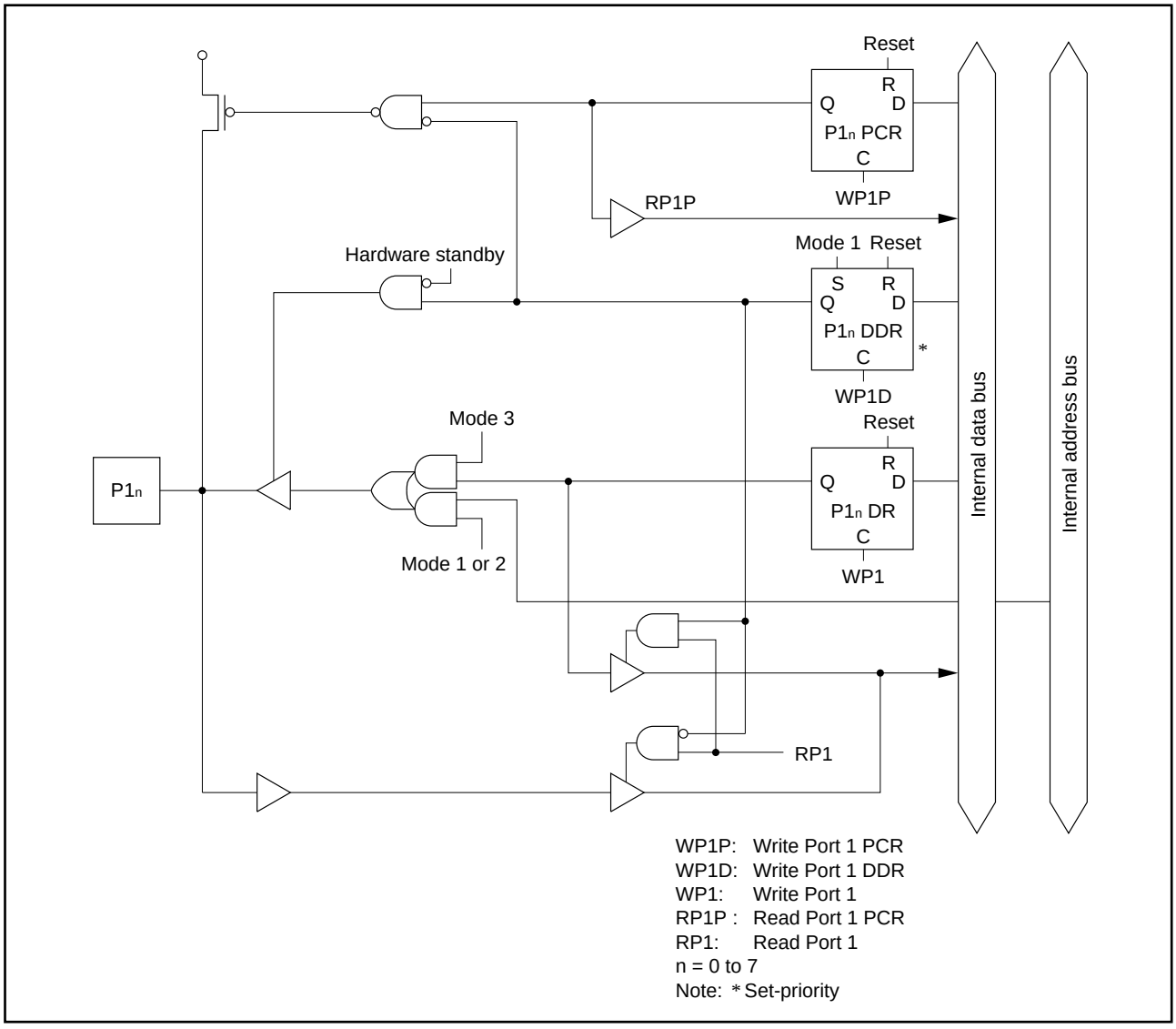

Figure 5-1. Port 1 Schematic Diagram

5.3 Port 2

Port 2 is an 8-bit input/output port that also provides the high bits of the address bus. The function of port 2 depends on the MCU mode as indicated in table 5-5.

Table 5-5. Functions of Port 2

Mode 1	Mode 2	Mode 3
Address bus (High) (A_{15} to A_8)	Input port or Address bus (High) (A_{15} to A_8)*	Input/output port

Note: * Depending on the bit settings in the data direction register: 0—input pin; 1—address pin

Pins of port 2 can drive a single TTL load and a 90pF capacitive load when they are used as output pins. They can also drive light-emitting diodes and a Darlington pair. When they are used as input pins, they have programmable MOS transistor pull-ups.

Table 5-6 details the port 2 registers.

Table 5-6. Port 2 Registers

Name	Abbreviation	Read/Write	Initial value	Address
Port 2 data direction register	P2DDR	W	H'FF (mode 1) H'00 (modes 2 and 3)	H'FFB1
Port 2 data register	P2DR	R/W	H'00	H'FFB3
Port 2 input pull-up control register	P2PCR	R/W	H'00	H'FFAD

Port 2 Data Direction Register (P2DDR)—H'FFB1

Bit	7	6	5	4	3	2	1	0
	$P2_7DDR$	$P2_6DDR$	$P2_5DDR$	$P2_4DDR$	$P2_3DDR$	$P2_2DDR$	$P2_1DDR$	$P2_0DDR$
Mode 1								
Initial value	1	1	1	1	1	1	1	1
Read/Write	—	—	—	—	—	—	—	—
Modes 2 and 3								
Initial value	0	0	0	0	0	0	0	0
Read/Write	W	W	W	W	W	W	W	W

P2DDR is an 8-bit register that selects the direction of each pin in port 2. A pin functions as an output pin if the corresponding bit in P2DDR is set to “1,” and as an input pin if the bit is cleared to “0.”

Port 2 Data Register (P2DR)—H'FFB3

Bit	7	6	5	4	3	2	1	0
	$P2_7$	$P2_6$	$P2_5$	$P2_4$	$P2_3$	$P2_2$	$P2_1$	$P2_0$
Initial value	0	0	0	0	0	0	0	0
Read/Write	R/W	R/W	R/W	R/W	R/W	R/W	R/W	R/W

P2DR is an 8-bit register containing the data for pins $P2_7$ to $P2_0$. When the CPU reads P2DR, for output pins it reads the value in the P2DR latch, but for input pins, it obtains the logic level directly from the pin, bypassing the P2DR latch.

Port 2 Input Pull-Up Control Register (P2PCR)—H'FFAD

Bit	7	6	5	4	3	2	1	0
	$P2_7PCR$	$P2_6PCR$	$P2_5PCR$	$P2_4PCR$	$P2_3PCR$	$P2_2PCR$	$P2_1PCR$	$P2_0PCR$
Initial value	0	0	0	0	0	0	0	0
Read/Write	R/W	R/W	R/W	R/W	R/W	R/W	R/W	R/W

P2PCR is an 8-bit readable/writable register that controls the input pull-up transistors in port 2. If a bit in P2DDR is cleared to “0” (designating input) and the corresponding bit in P2PCR is set to “1,” the input pull-up transistor for that bit is turned on.

Mode 1: In mode 1 (expanded mode without on-chip ROM), port 2 is automatically used for address output. The port 2 data direction register is unwritable. All bits in P2DDR are automatically set to “1” and cannot be cleared to “0.”

Mode 2: In mode 2 (expanded mode with on-chip ROM), the usage of port 2 can be selected on a pin-by-pin basis. A pin is used for general-purpose input if its data direction bit is cleared to “0,” or for address output if its data direction bit is set to “1.”

Mode 3: In the single-chip mode port 2 is a general-purpose input/output port.

Reset: A reset clears P2DDR, P2DR, and P2PCR to all “0,” placing all pins in the input state with the pull-up transistors off. In mode 1, when the chip comes out of reset, P2DDR is set to all “1.”

Hardware Standby Mode: All pins are placed in the high-impedance state with the pull-up transistors off. P2DR and P2PCR are initialized to H'00. In modes 2 and 3, P2DDR is initialized to H'00.

Software Standby Mode: In the software standby mode, P2DDR, P2DR, and P2PCR remain in their previous state. Address output pins are Low. General-purpose output pins continue to output the data in P2DR.

Input Pull-Up Transistors: Port 2 has built-in programmable input pull-up transistors that are available in modes 2 and 3. The pull-up for each bit can be turned on and off individually. To turn on an input pull-up in mode 2 or 3, set the corresponding P2PCR bit to “1” and clear the corresponding P2DDR bit to “0.” P2PCR is cleared to H'00 by a reset and in the hardware standby mode, turning all input pull-ups off. In software standby mode, the previous state is maintained.

Table 5-7 indicates the states of the input pull-up transistors in each operating mode.

Table 5-7. States of Input Pull-Up Transistors (Port 2)

Mode	Reset	Hardware standby	Software standby	Other operating modes
1	Off	Off	Off	Off
2	Off	Off	On/off	On/off
3	Off	Off	On/off	On/off

Notes: Off: The input pull-up transistor is always off.
On/off: The input pull-up transistor is on if P2PCR = “1” and P2DDR = “0,” but off otherwise.

Figure 5-2 shows a schematic diagram of port 2.

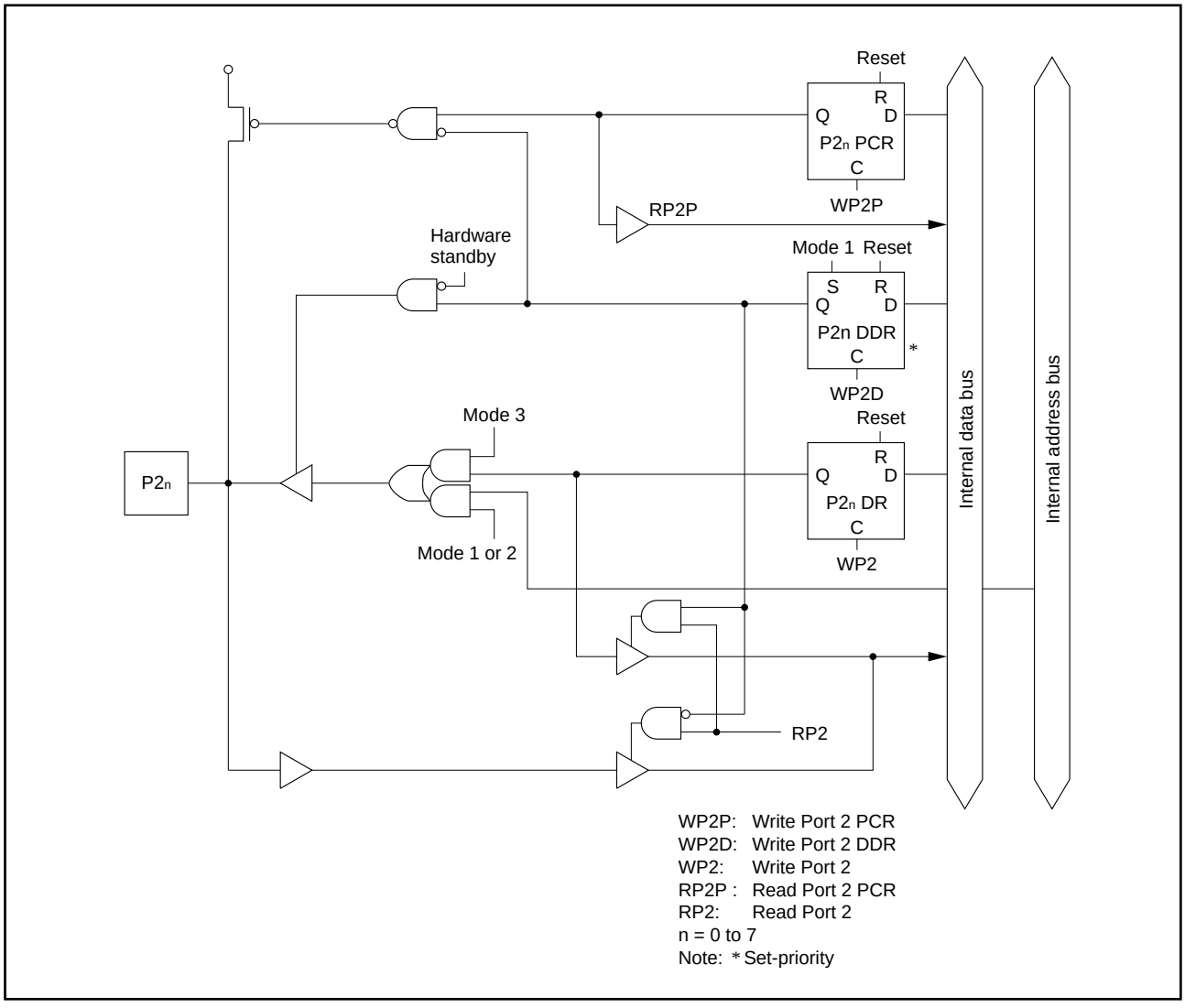

Figure 5-2. Port 2 Schematic Diagram

5.4 Port 3

Port 3 is an 8-bit input/output port that also provides the external data bus. The function of port 3 depends on the MCU mode as indicated in table 5-8.

Table 5-8. Functions of Port 3

Mode 1	Mode 2	Mode 3
Data bus	Data bus	Input/output port

Pins of port 3 can drive a single TTL load and a 90pF capacitive load when they are used as output pins. They can also drive a Darlington pair. When they are used as input pins, they have programmable MOS transistor pull-ups.

Table 5-9 details the port 3 registers.

Table 5-9. Port 3 Registers

Name	Abbreviation	Read/Write	Initial value	Address
Port 3 data direction register	P3DDR	W	H'00	H'FFB4
Port 3 data register	P3DR	R/W	H'00	H'FFB6
Port 3 input pull-up control register	P3PCR	R/W	H'00	H'FFAE

Port 3 Data Direction Register (P3DDR)—H'FFB4

Bit	7	6	5	4	3	2	1	0
	$P3_7DDR$	$P3_6DDR$	$P3_5DDR$	$P3_4DDR$	$P3_3DDR$	$P3_2DDR$	$P3_1DDR$	$P3_0DDR$
Initial value	0	0	0	0	0	0	0	0
Read/Write	W	W	W	W	W	W	W	W

P3DDR is an 8-bit register that selects the direction of each pin in port 3. A pin functions as an output pin if the corresponding bit in P3DDR is set to “1,” and as an input pin if the bit is cleared to “0.”

Port 3 Data Register (P3DR)—H'FFB6

Bit	7	6	5	4	3	2	1	0
	$P3_7$	$P3_6$	$P3_5$	$P3_4$	$P3_3$	$P3_2$	$P3_1$	$P3_0$
Initial value	0	0	0	0	0	0	0	0
Read/Write	R/W	R/W	R/W	R/W	R/W	R/W	R/W	R/W

P3DR is an 8-bit register containing the data for pins $P3_7$ to $P3_0$. When the CPU reads P3DR, for output pins it reads the value in the P3DR latch, but for input pins, it obtains the logic level directly from the pin, bypassing the P3DR latch.

Port 3 Input Pull-Up Control Register (P3PCR)—H'FFAE

Bit	7	6	5	4	3	2	1	0
	$P3_7$PCR	$P3_6$PCR	$P3_5$PCR	$P3_4$PCR	$P3_3$PCR	$P3_2$PCR	$P3_1$PCR	$P3_0$PCR
Initial value	0	0	0	0	0	0	0	0
Read/Write	R/W	R/W	R/W	R/W	R/W	R/W	R/W	R/W

P3PCR is an 8-bit readable/writable register that controls the input pull-up transistors in port 3. If a bit in P3DDR is cleared to “0” (designating input) and the corresponding bit in P3PCR is set to “1,” the input pull-up transistor for that bit is turned on.

Modes 1 and 2: In the expanded modes, port 3 is automatically used as the data bus. The values in P3DDR, P3DR, and P3PCR are ignored.

Mode 3: In the single-chip mode, port 3 can be used as a general-purpose input/output port.

Reset and Hardware Standby Mode: A reset or entry to the hardware standby mode clears P3DDR, P3DR, and P3PCR to all “0.” All pins are placed in the high-impedance state with the pull-up transistors off.

Software Standby Mode: In the software standby mode, P3DDR, P3DR, and P3PCR remain in their previous state. In modes 1 and 2, all pins are placed in the data input (high-impedance) state. In mode 3, all pins remain in their previous input or output state.

Input Pull-Up Transistors: Port 3 has built-in programmable input pull-up transistors that are available in mode 3. The pull-up for each bit can be turned on and off individually. To turn on an input pull-up in mode 3, set the corresponding P3PCR bit to “1” and clear the corresponding P3DDR bit to “0.” P3PCR is cleared to H'00 by a reset and in the hardware standby mode, turning all input pull-ups off. In software standby mode, the previous state is maintained.

Table 5-10 indicates the states of the input pull-up transistors in each operating mode.

Table 5-10. States of Input Pull-Up Transistors (Port 3)

Mode	Reset	Hardware standby	Software standby	Other operating modes
1	Off	Off	Off	Off
2	Off	Off	Off	Off
3	Off	Off	On/off	On/off

Notes: Off: The input pull-up transistor is always off.
On/off: The input pull-up transistor is on if P3PCR = “1” and P3DDR = “0,” but off otherwise.

Figure 5-3 shows a schematic diagram of port 3.

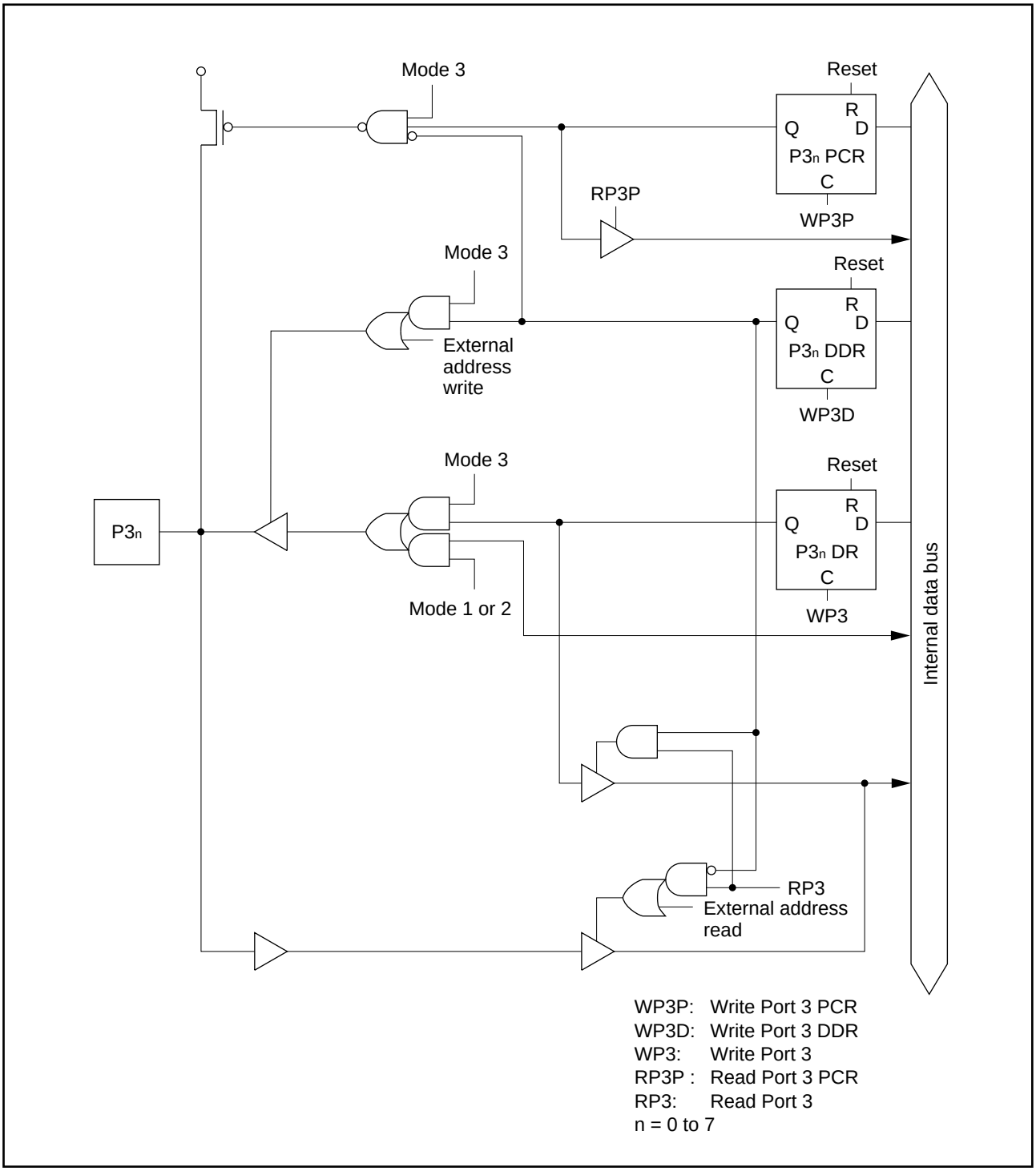

Figure 5-3. Port 3 Schematic Diagram

5.5 Port 4

Port 4 is an 8-bit input/output port that also provides pins for interrupt input ($\overline{IRQ_0}$ to $\overline{IRQ_2}$), A/D trigger input, system clock (Ø) output, and bus control signals (in the expanded modes).

Pins $P4_7$ to $P4_3$ have different functions in different modes. Pins $P4_2$ to $P4_0$ have the same functions in all modes. Table 5-11 lists the pin functions.

Table 5-11. Port 4 Pin Functions

Pin	Expanded modes	Single-chip mode
$P4_0$	$P4_0$ input/output , $\overline{IRQ_2}$ input, and $\overline{ADTRG}$ input (simultaneously)	
$P4_1$	$P4_1$ input/output and $\overline{IRQ_1}$ input (simultaneously)	
$P4_2$	$P4_2$ input/output and $\overline{IRQ_0}$ input (simultaneously)	
$P4_3$	$\overline{RD}$ output	$P4_3$ input/output
$P4_4$	$\overline{WR}$ output	$P4_4$ input/output
$P4_5$	$\overline{AS}$ output	$P4_5$ input/output
$P4_6$	Ø output	$P4_6$ input or Ø output
$P4_7$	$\overline{WAIT}$ input	$P4_7$ input/output

Pins of port 4 can drive a single TTL load and a 90pF capacitive load when they are used as output pins.

Table 5-12 details the port 4 registers.

Table 5-12. Port 4 Registers

Name	Abbreviation	Read/Write	Initial value	Address
Port 4 data direction register	P4DDR	W	H'40 (modes 1 and 2) H'00 (mode 3)	H'FFB5
Port 4 data register	P4DR	R/W*1	Undetermined*2	H'FFB7

Notes: *1 Bit 6 is read-only.
*2 Bit 6 is undetermined. Other bits are initially “0.”

Port 4 Data Direction Register (P4DDR)—H'FFB5

Bit	7	6	5	4	3	2	1	0
	$P4_7DDR$	$P4_6DDR$	$P4_5DDR$	$P4_4DDR$	$P4_3DDR$	$P4_2DDR$	$P4_1DDR$	$P4_0DDR$
Modes 1 and 2								
Initial value	0	1	0	0	0	0	0	0
Read/Write	W	—	W	W	W	W	W	W
Mode 3								
Initial value	0	0	0	0	0	0	0	0
Read/Write	W	W	W	W	W	W	W	W

P4DDR is an 8-bit register that selects the direction of each pin in port 4. A pin functions as an output pin if the corresponding bit in P4DDR is set to “1,” and as in input pin if the bit is cleared to “0.”

Port 4 Data Register (P4DR)—H'FFB7

Bit	7	6	5	4	3	2	1	0
	$P4_7$	$P4_6$	$P4_5$	$P4_4$	$P4_3$	$P4_2$	$P4_1$	$P4_0$
Initial value	0	*	0	0	0	0	0	0
Read/Write	R/W	R	R/W	R/W	R/W	R/W	R/W	R/W

Note: * Determined by the level at pin $P4_6$.

P4DR is an 8-bit register containing the data for pins $P4_7$ to $P4_0$. When the CPU reads P4DR, for output pins (P4DDR = “1”) it reads the value in the P4DR latch, but for input pins (P4DDR = “0”), it obtains the logic level directly from the pin, bypassing the P4DR latch. This also applies to pins used for interrupt input, A/D trigger input, clock output, and control signal input or output.

Pins $P4_0$, $P4_1$, and $P4_2$: Can be used for general-purpose input or output, interrupt request input, or A/D trigger input. See table 5-11. If a pin is used for interrupt or A/D trigger input, its data direction bit should be cleared to “0,” so that the output from P4DR will not generate an interrupt request or A/D trigger signal.

Pins $P4_3$, $P4_4$ and $P4_5$: In modes 1 and 2 (the expanded modes), these pins are used for output of the $\overline{RD}$, $\overline{WR}$, and $\overline{AS}$ bus control signals. They are unaffected by the values in P4DDR and P4DR.

In mode 3 (single-chip mode), these pins can be used for general-purpose input or output.

Pin $P4_6$: In modes 1 and 2, this pin is used for system clock (Ø) output.

In mode 3, this pin is used for general-purpose input if $P4_6$DDR is cleared to “0,” or system clock output if $P4_6$DDR is set to “1.”

Pin $P4_7$: In modes 1 and 2, this pin is used for input of the $\overline{\text{WAIT}}$ bus control signal. It is unaffected by the values in P4DDR and P4DR.

In mode 3 (single-chip mode), this pin can be used for general-purpose input or output.

Reset: In the single-chip mode (mode 3), a reset initializes all pins of port 4 to the general-purpose input function. In the expanded modes (modes 1 and 2), $P4_0$ to $P4_2$ are initialized as input port pins, and $P4_3$ to $P4_7$ are initialized to their bus control and system clock output functions.

Hardware Standby Mode: All pins are placed in the high-impedance state.

Software Standby Mode: All pins remain in their previous state. For $\overline{RD}$, $\overline{WR}$, $\overline{AS}$, and Ø this means the High output state.

Figures 5-4 to 5-8 show schematic diagrams of port 4.

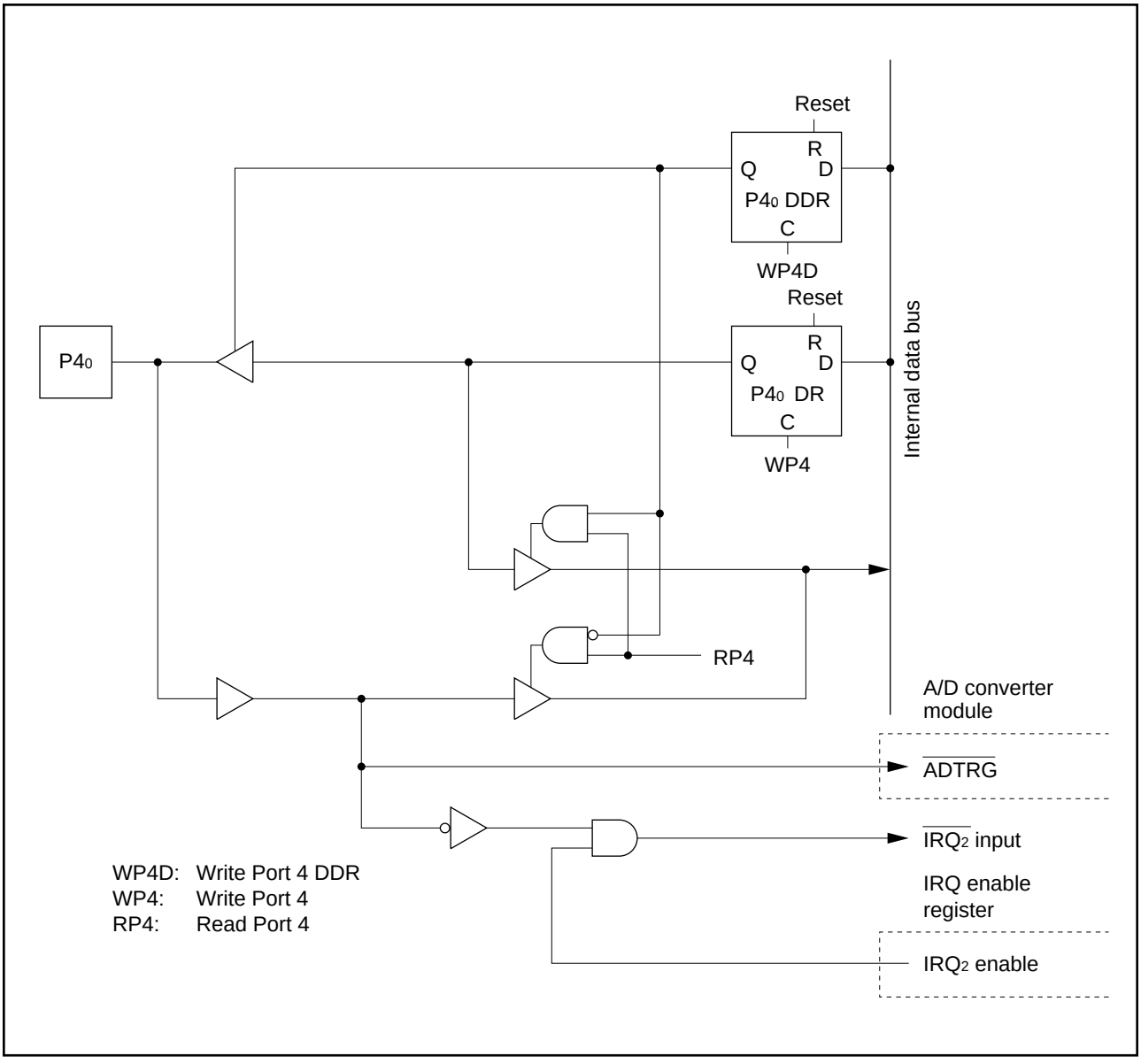

Figure 5-4. Port 4 Schematic Diagram (Pin P4₀)

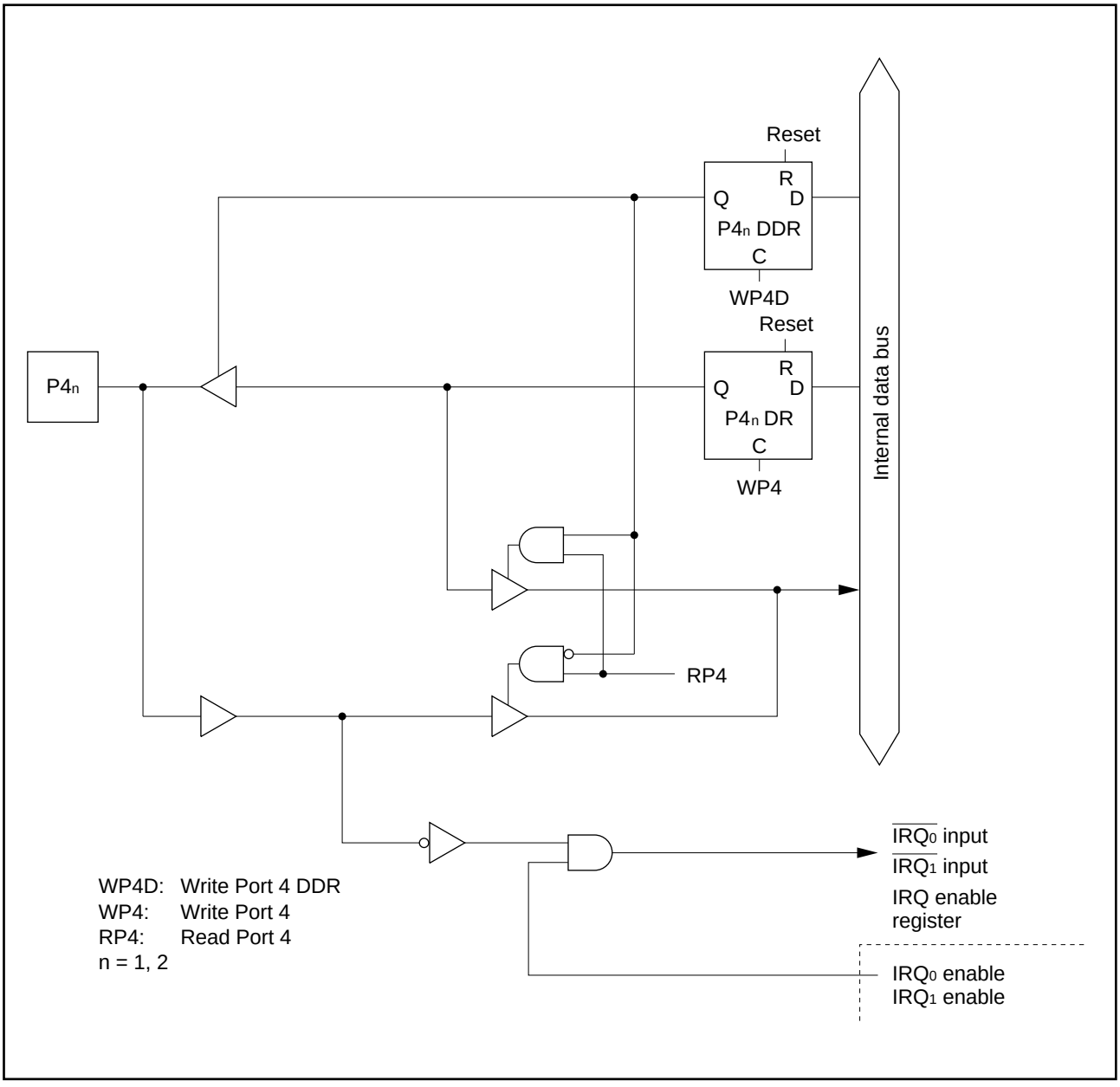

Figure 5-5. Port 4 Schematic Diagram (Pins P4$_1$ and P4$_2$)

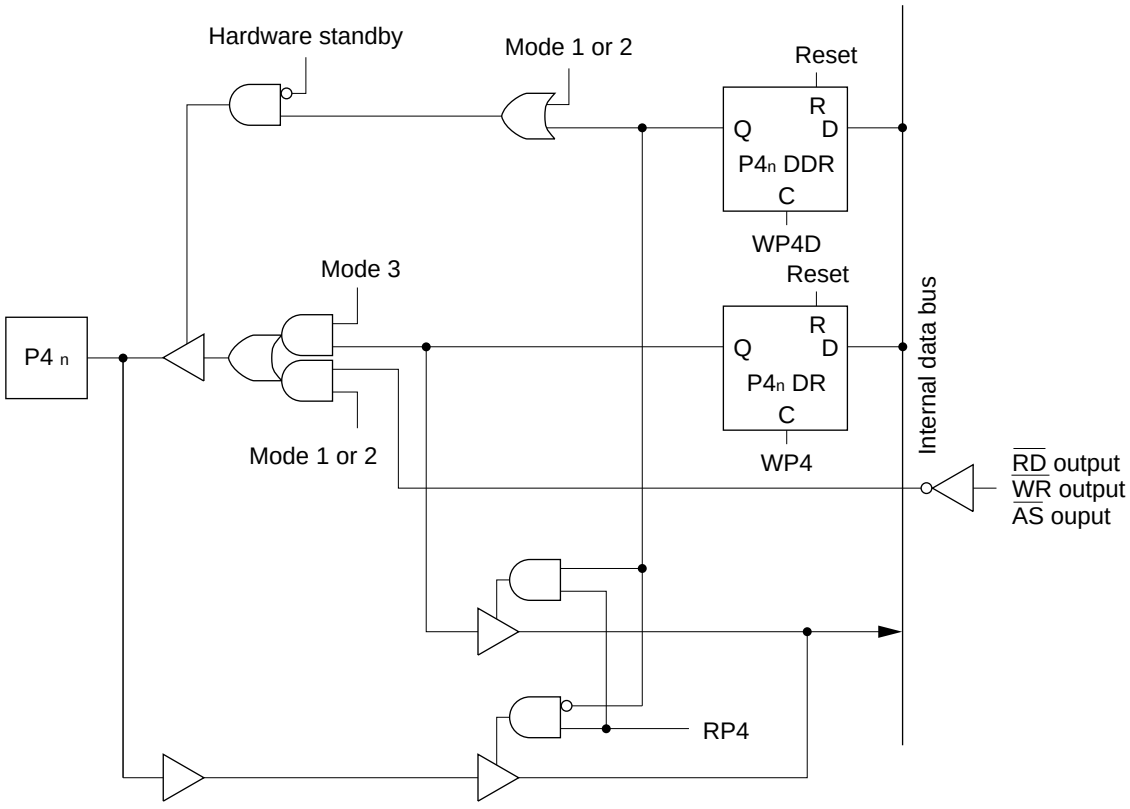

WP4D: Write Port 4 DDR
WP4: Write Port 4
RP4: Read Port 4
n = 3, 4, 5

Figure 5-6. Port 4 Schematic Diagram (Pins P4$_3$, P4$_4$ and P4$_5$)

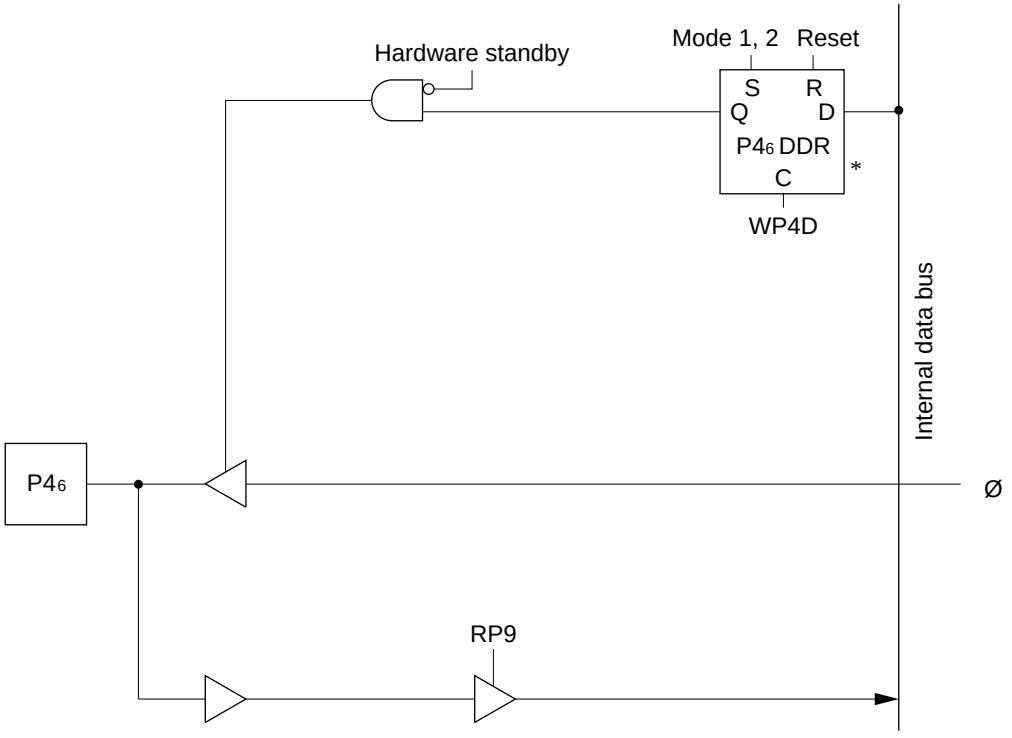

WP4D: Write Port 4 DDR
WP4: Write Port 4
RP4: Read Port 4
Note: * Set-priority

Figure 5-7. Port 4 Schematic Diagram (Pin P46)

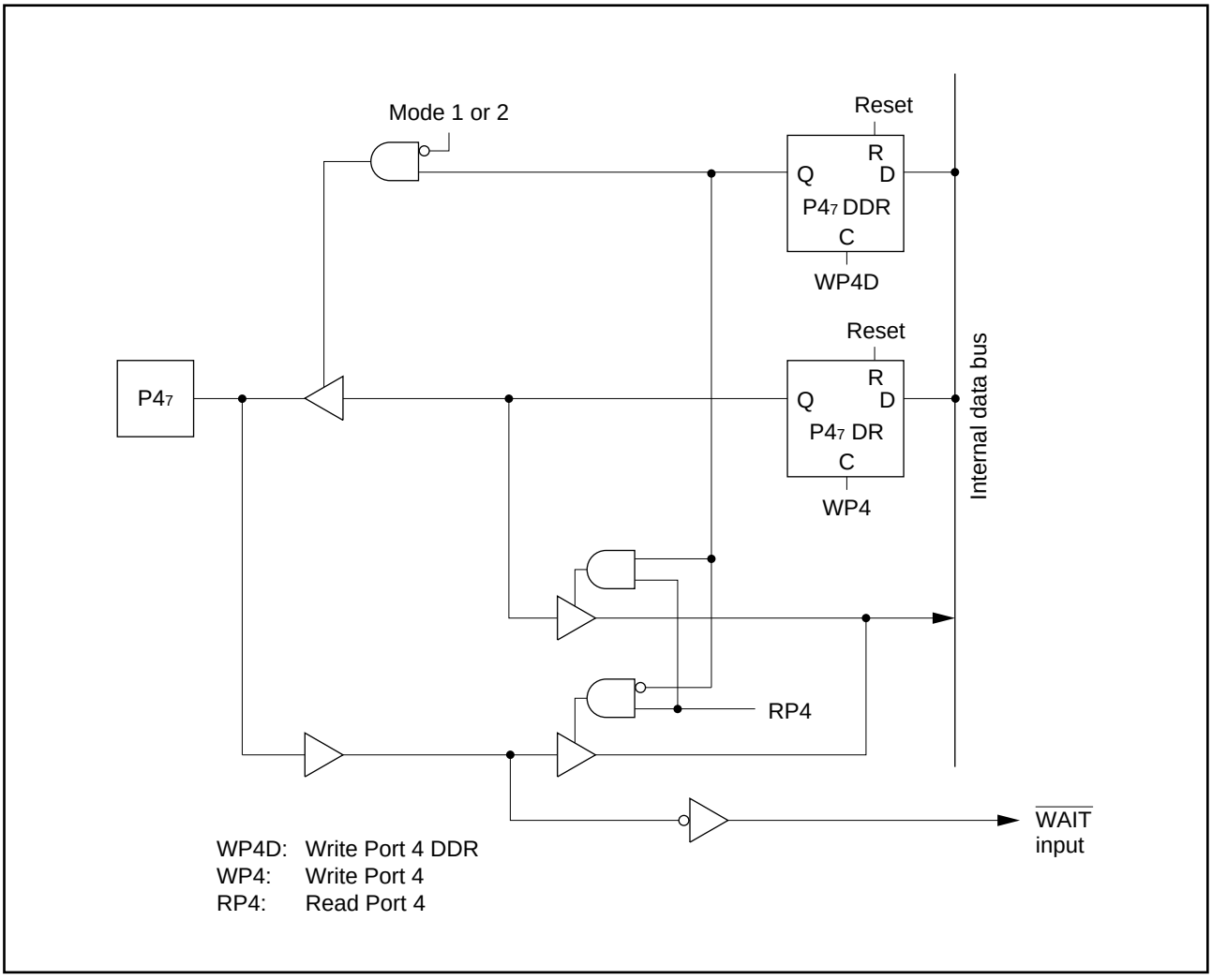

Figure 5-8. Port 4 Schematic Diagram (Pin P4$_7$)

5.6 Port 5

Port 5 is a 3-bit input/output port that also provides input and output pins for the serial communication interface (SCI). The pin functions depend on control bits in the serial control register (SCR). Pins not used for serial communication are available for general-purpose input/output. Table 5-13 lists the pin functions, which are the same in both the expanded and single-chip modes.

Table 5-13. Port 5 Pin Functions (Modes 1 to 3)

Usage	Pin functions		
I/O port	$P5_0$	$P5_1$	$P5_2$
Serial communication interface	TxD	RxD	SCK

See section 8, “Serial Communication Interface” for details of the serial control bits. Pins used by the serial communication interface are switched between input and output without regard to the values in the data direction register.

Pins of port 5 can drive a single TTL load and a 30pF capacitive load when they are used as output pins. They can also drive a Darlington pair.

Table 5-14 details the port 5 registers.

Table 5-14. Port 5 Registers

Name	Abbreviation	Read/Write	Initial value	Address
Port 5 data direction register	P5DDR	W	H'F8	H'FFB8
Port 5 data register	P5DR	R/W	H'F8	H'FFBA

Port 5 Data Direction Register (P5DDR)—H'FFB8

Bit	7	6	5	4	3	2	1	0
	—	—	—	—	—	$P5_2DDR$	$P5_1DDR$	$P5_0DDR$
Initial value	1	1	1	1	1	0	0	0
Read/Write	—	—	—	—	—	W	W	W

P5DDR is an 8-bit register that selects the direction of each pin in port 5. A pin functions as an output pin if the corresponding bit in P5DDR is set to “1,” and as an input pin if the bit is cleared to “0.”

Port 5 Data Register (P5DR)—H'FFBA

Bit	7	6	5	4	3	2	1	0
	—	—	—	—	—	$P5_2$	$P5_1$	$P5_0$
Initial value	1	1	1	1	1	0	0	0
Read/Write	—	—	—	—	—	R/W	R/W	R/W

P5DR is an 8-bit register containing the data for pins $P5_2$ to $P5_0$. When the CPU reads P5DR, for output pins (P5DDR = “1”) it reads the value in the P5DR latch, but for input pins (P5DDR = “0”), it obtains the logic level directly from the pin, bypassing the P5DR latch. This also applies to pins used for serial communication.

Pin $P5_0$: This pin can be used for general-purpose input or output, or for output of serial transmit data (TxD). When used for TxD output, this pin is unaffected by the values in P5DDR and P5DR.

Pin $P5_1$: This pin can be used for general-purpose input or output, or for input of serial receive data (RxD). When used for RxD input, this pin is unaffected by P5DDR and P5DR.

Pin $P5_2$: This pin can be used for general-purpose input or output, or for serial clock input or output (SCK). When used for SCK input or output, this pin is unaffected by P5DDR and P5DR.

Reset and Hardware Standby Mode: A reset or entry to the hardware standby mode makes all pins of port 5 into input port pins.

Software Standby Mode: In the software standby mode, the serial control register is initialized but P5DDR and P5DR remain in their previous states. All pins become input or output port pins depending on the setting of P5DDR. Output pins output the values in P5DR.

Figures 5-9 to 5-11 show schematic diagrams of port 5.

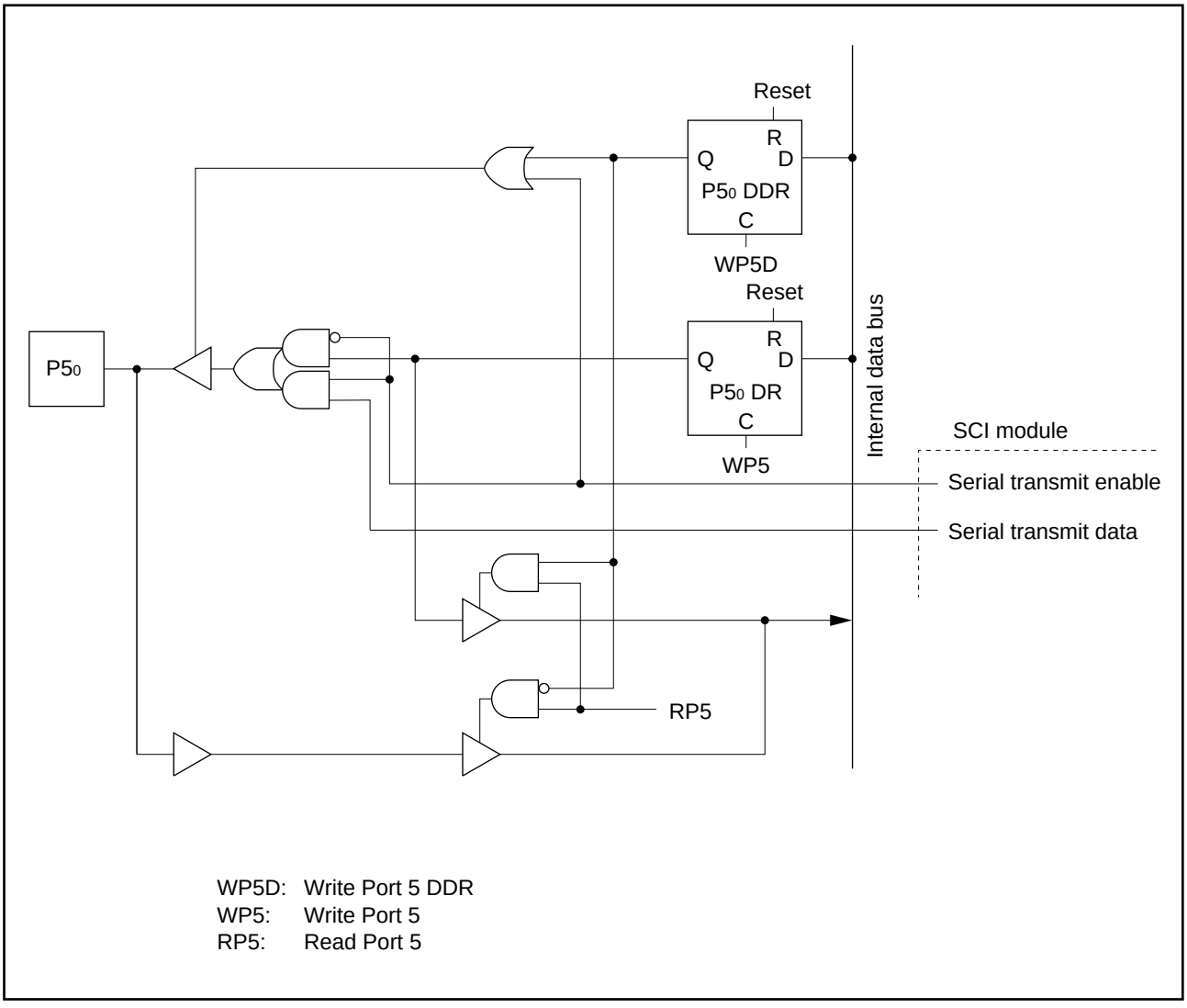

Figure 5-9. Port 5 Schematic Diagram (Pin P5$_0$)

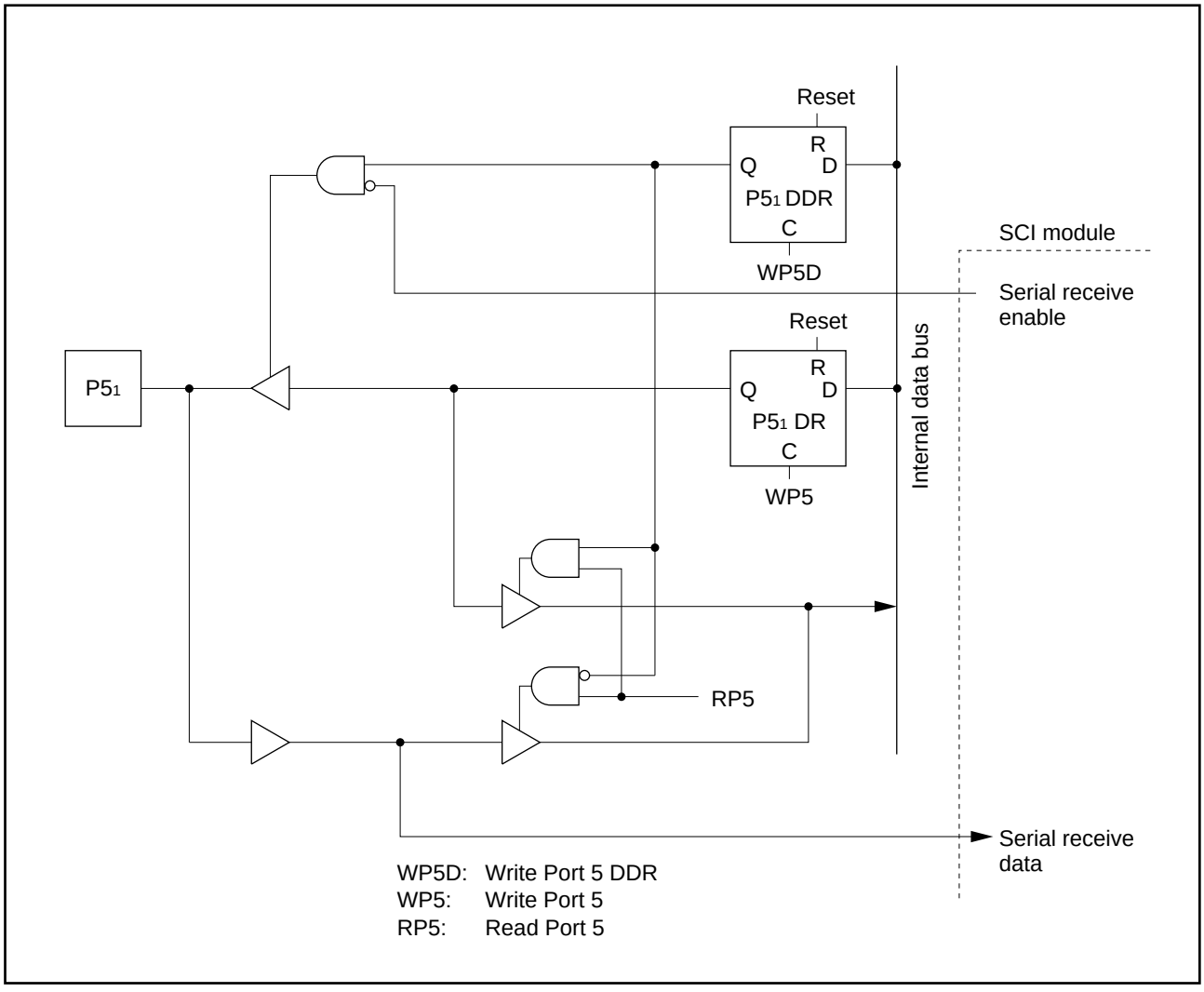

Figure 5-10. Port 5 Schematic Diagram (Pin P5$_1$)

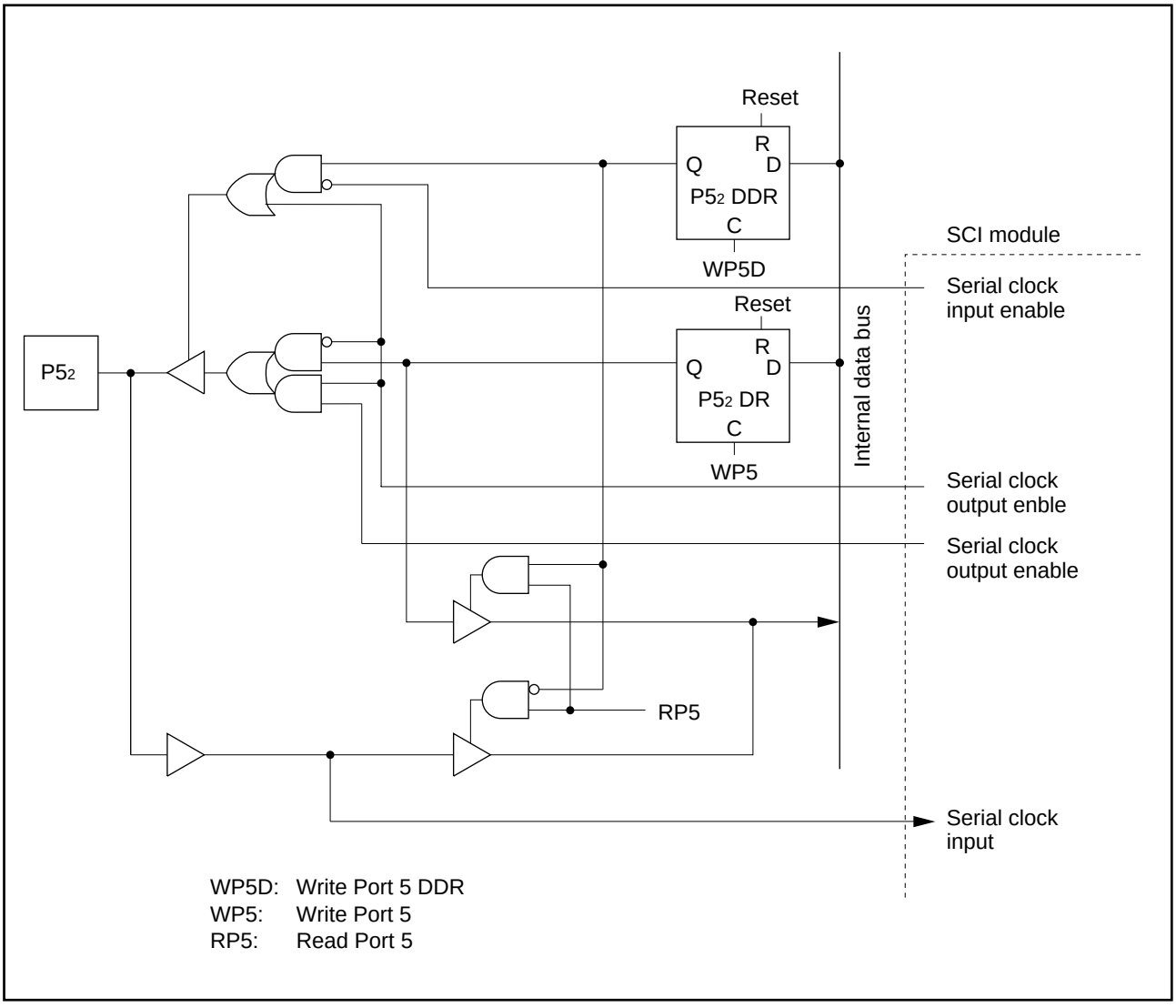

Figure 5-11. Port 5 Schematic Diagram (Pin P52)

5.7 Port 6

Port 6 is an 8-bit input/output port that also provides input and output pins for the 16-bit free-running timer and 8-bit timers. The pin functions depend on control bits in the control registers of the timers. Pins not used by the timers are available for general-purpose input/output. Table 5-15 lists the pin functions, which are the same in both the expanded and single-chip modes.

Table 5-15. Port 6 Pin Functions (Modes 1 to 3)

Usage	Pin functions (Modes 1 to 3)							
I/O port	$P6_0$	$P6_1$	$P6_2$	$P6_3$	$P6_4$	$P6_5$	$P6_6$	$P6_7$
16-bit timer	FTCI	FTOA	FTIA	FTIB	FTIC	FTID	FTOB	—
8-bit timer	$TMCI_0$	—	—	$TMRI_0$	TMO_0	$TMCI_1$	$TMRI_1$	TMO_1

See section 6, “16-Bit Free-Running Timer,” and section 7, “8-Bit Timers” for details of the timer control bits.

Pins of port 6 can drive a single TTL load and a 90pF capacitive load when they are used as output pins. They can also drive a Darlington pair.

Table 5-16 details the port 6 registers.

Table 5-16. Port 6 Registers

Name	Abbreviation	Read/Write	Initial value	Address
Port 6 data direction register	P6DDR	W	H'00	H'FFB9
Port 6 data register	P6DR	R/W	H'00	H'FFBB

Port 6 Data Direction Register (P6DDR)—H'FFB9

Bit	7	6	5	4	3	2	1	0
	$P6_7DDR$	$P6_6DDR$	$P6_5DDR$	$P6_4DDR$	$P6_3DDR$	$P6_2DDR$	$P6_1DDR$	$P6_0DDR$
Initial value	0	0	0	0	0	0	0	0
Read/Write	W	W	W	W	W	W	W	W

P6DDR is an 8-bit register that selects the direction of each pin in port 6. A pin functions as an output pin if the corresponding bit in P6DDR is set to “1,” and as an input pin if the bit is cleared to “0.”

Port 6 Data Register (P6DR)—H'FFBB

Bit	7	6	5	4	3	2	1	0
	$P6_7$	$P6_6$	$P6_5$	$P6_4$	$P6_3$	$P6_2$	$P6_1$	$P6_0$
Initial value	0	0	0	0	0	0	0	0
Read/Write	R/W	R/W	R/W	R/W	R/W	R/W	R/W	R/W

P6DR is an 8-bit register containing the data for pins $P6_7$ to $P6_0$. When the CPU reads P6DR, for output pins (P6DDR = “1”) it reads the value in the P6DR latch, but for input pins (P6DDR = “0”), it obtains the logic level directly from the pin, bypassing the P6DR latch. This also applies to pins used for timer input and output.

Pin $P6_0$: This pin can be used for general-purpose input or output, and input of external clock signals to the 16-bit free-running timer and 8-bit timer 0. External clock input is selected by the CKS bits of the timers. When this pin is used for timer clock input, its P6DDR bit should normally be cleared to “0;” otherwise the timer will receive the value in P6DR.

Pin $P6_1$: This pin can be used for general-purpose input or output, or for 16-bit free-running timer output (FTOA). When timer output is selected by the OEA bit of the 16-bit free-running timer, this pin is unaffected by the values in P6DDR and P6DR.

Pin $P6_2$: This pin can be used for general-purpose input or output, and input of the FTIA input capture signal to the 16-bit free-running timer. FTIA input can operate simultaneously with general-purpose input or output.

Pin $P6_3$: This pin can be used for general-purpose input or output, input of the FTIB input capture signal to the 16-bit free-running timer, and input of the timer reset signal to 8-bit timer 0. FTIB input operates simultaneously with the other functions. Reset signal input is selected by the CCLR bits of 8-bit timer 0. When this pin is used for timer reset signal input, its P6DDR bit should normally be cleared to “0;” otherwise the timer will receive the value in P6DR.

Pin $P6_4$: This pin can be used for general-purpose input or output, input of the FTIC input capture signal to the 16-bit free-running timer, or output from 8-bit timer 0. FTIC input operates simultaneously with the other functions. When 8-bit timer output is selected by the OS bits of 8-bit timer 0, this pin is unaffected by the values in P6DDR and P6DR.

Pin P65: This pin can be used for general-purpose input or output, input of the FTID input capture signal to the 16-bit free-running timer, or input of an external clock signal to 8-bit timer 1. FTID input operates simultaneously with the other functions. When external clock input is selected by the CKS bits of 8-bit timer 1, the P6DDR bit of this pin should normally be cleared to "0," otherwise the timer will receive the value in P6DR.

Pin P66: This pin can be used for general-purpose input or output, 16-bit free-running timer output (FTOB), and input of the timer reset signal to 8-bit timer 1. Reset signal input is selected by the CCLR bits of 8-bit timer 1, and can operate simultaneously with general-purpose input or output or 16-bit timer output. When 16-bit timer output is selected by the OEB bit of the 16-bit free-running timer, this pin is unaffected by the values in P6DDR and P6DR.

Pin P67: This pin can be used for general-purpose input or output, or output from 8-bit timer 1. When 8-bit timer output is selected by the OS bits of 8-bit timer 1, this pin is unaffected by the values in P6DDR and P6DR.

Reset and Hardware Standby Mode: A reset or entry to the hardware standby mode clears P6DDR and P6DR to all "0" and initializes the control registers of both the 8-bit and 16-bit timers. All pins become input port pins.

Software Standby Mode: In the software standby mode, the control registers of the 8-bit and 16-bit timers are initialized but P6DDR and P6DR remain in their previous states. All pins become input or output port pins depending on the setting of P6DDR. Output pins output the values in P6DR.

Figures 5-12 to 5-18 show schematic diagrams of port 6.

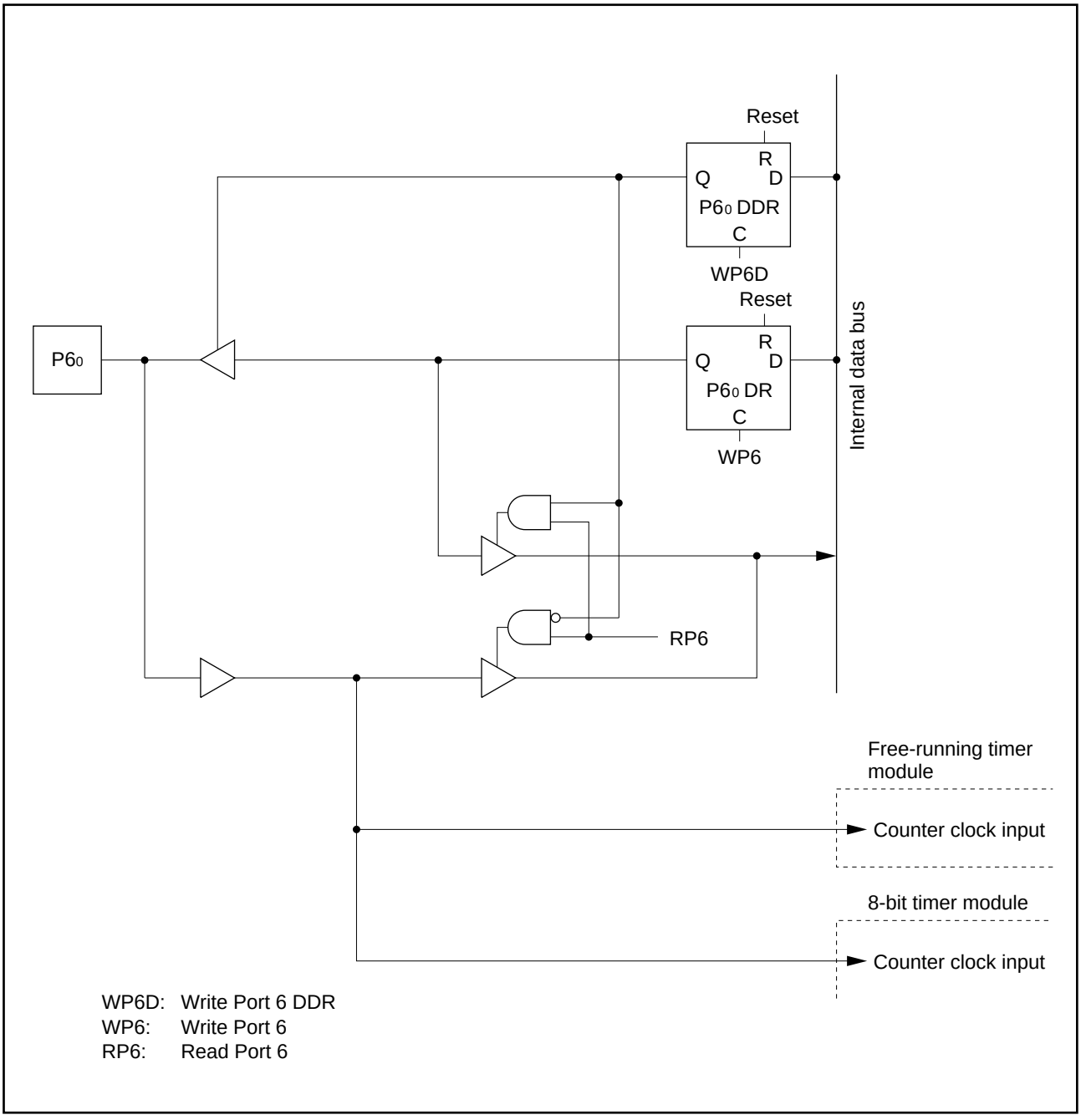

Figure 5-12. Port 6 Schematic Diagram (Pin P6$_0$)

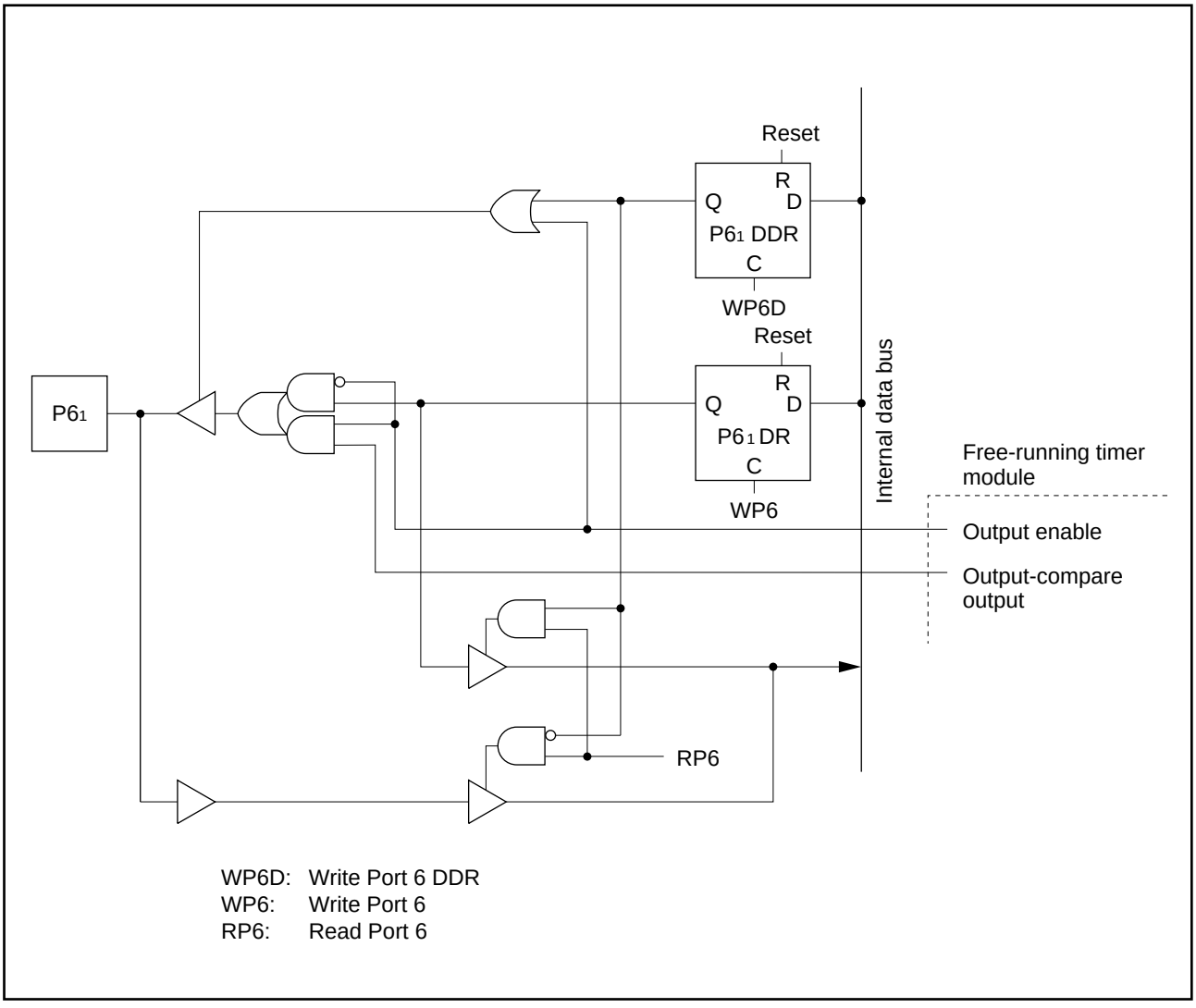

Figure 5-13. Port 6 Schematic Diagram (Pin P61)

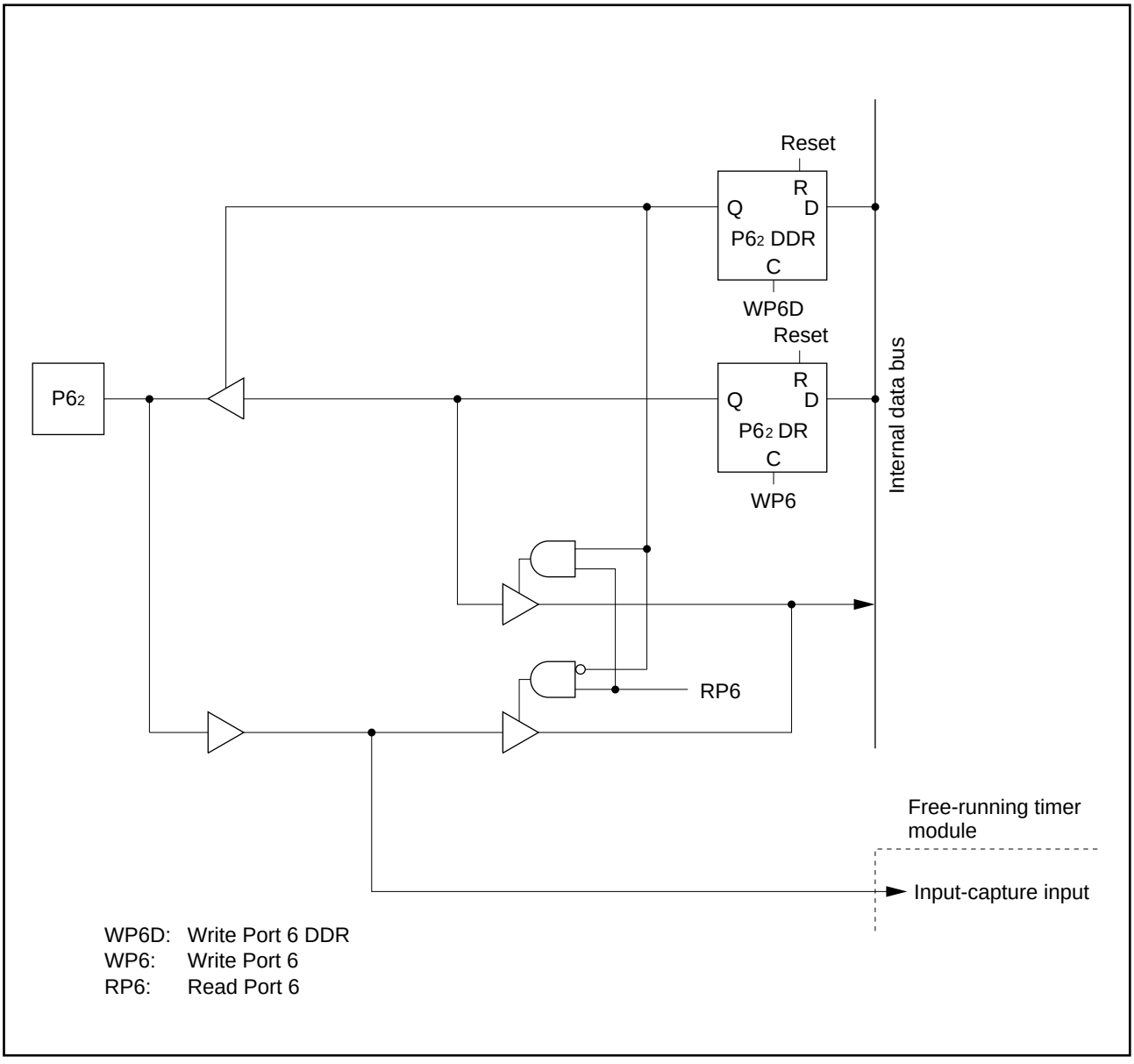

Figure 5-14. Port 6 Schematic Diagram (Pin P6$_2$)

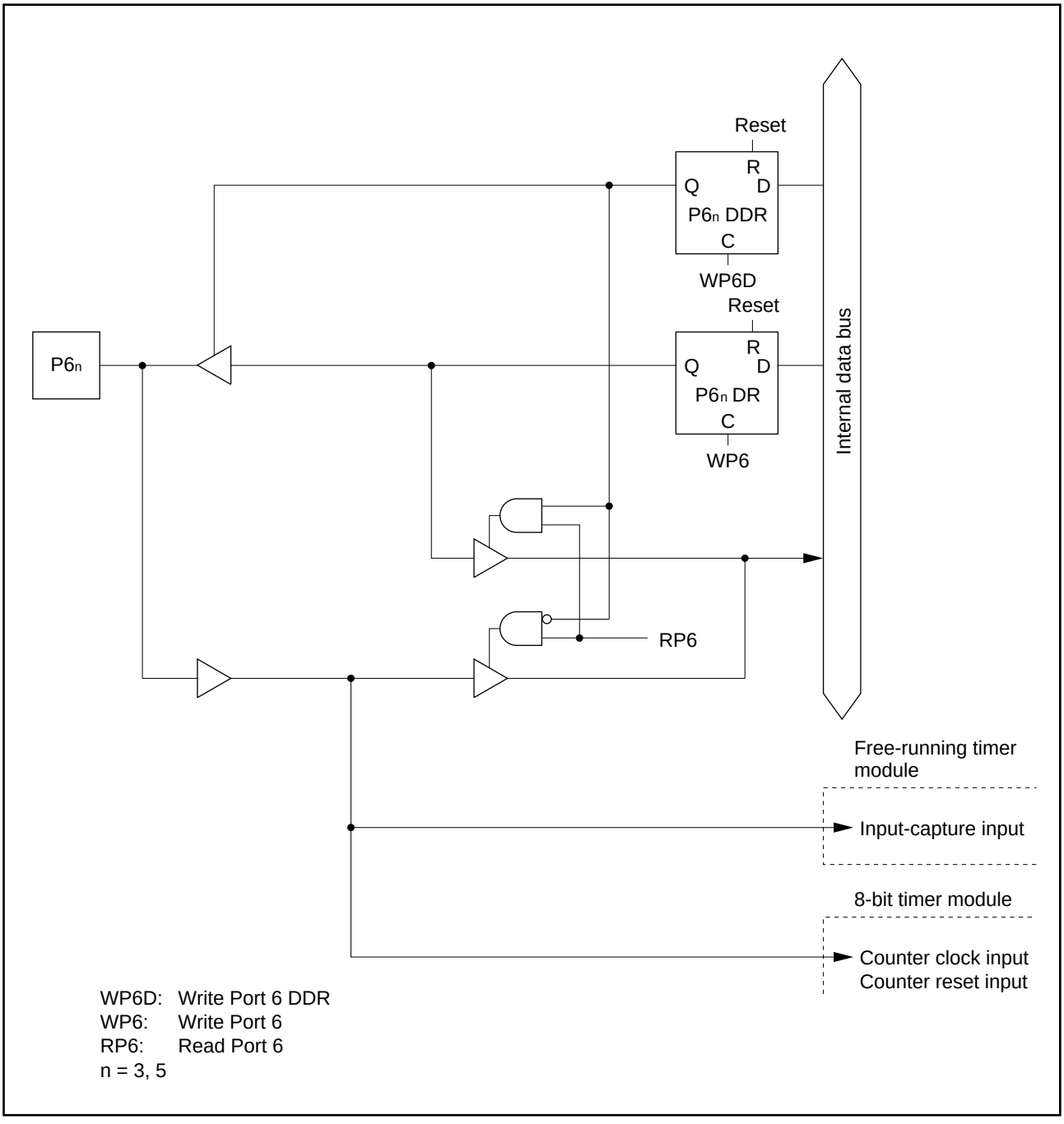

Figure 5-15. Port 6 Schematic Diagram (Pins P6$_3$ and P6$_5$)

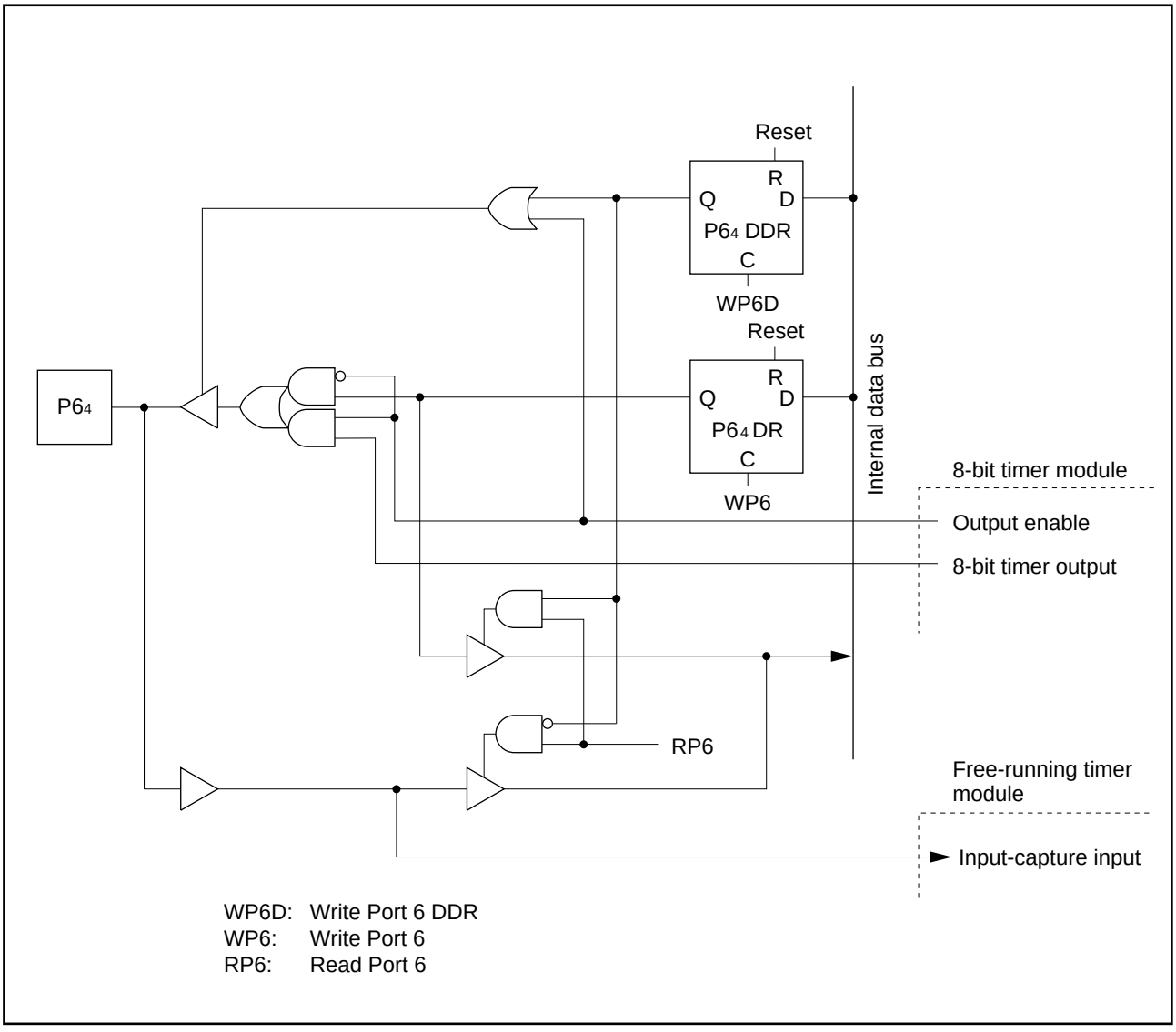

Figure 5-16. Port 6 Schematic Diagram (Pin P64)

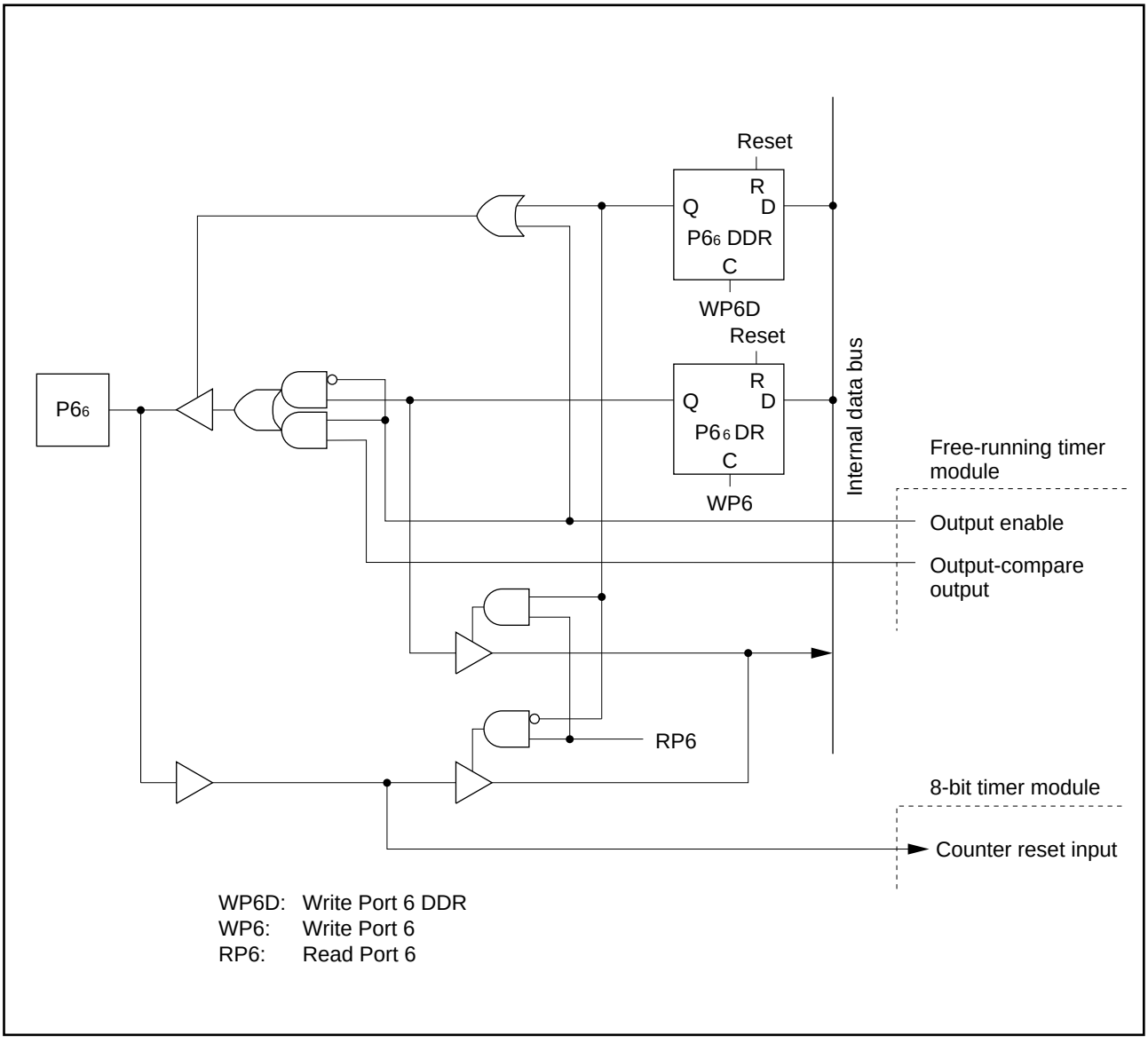

Figure 5-17. Port 6 Schematic Diagram (Pin P66)

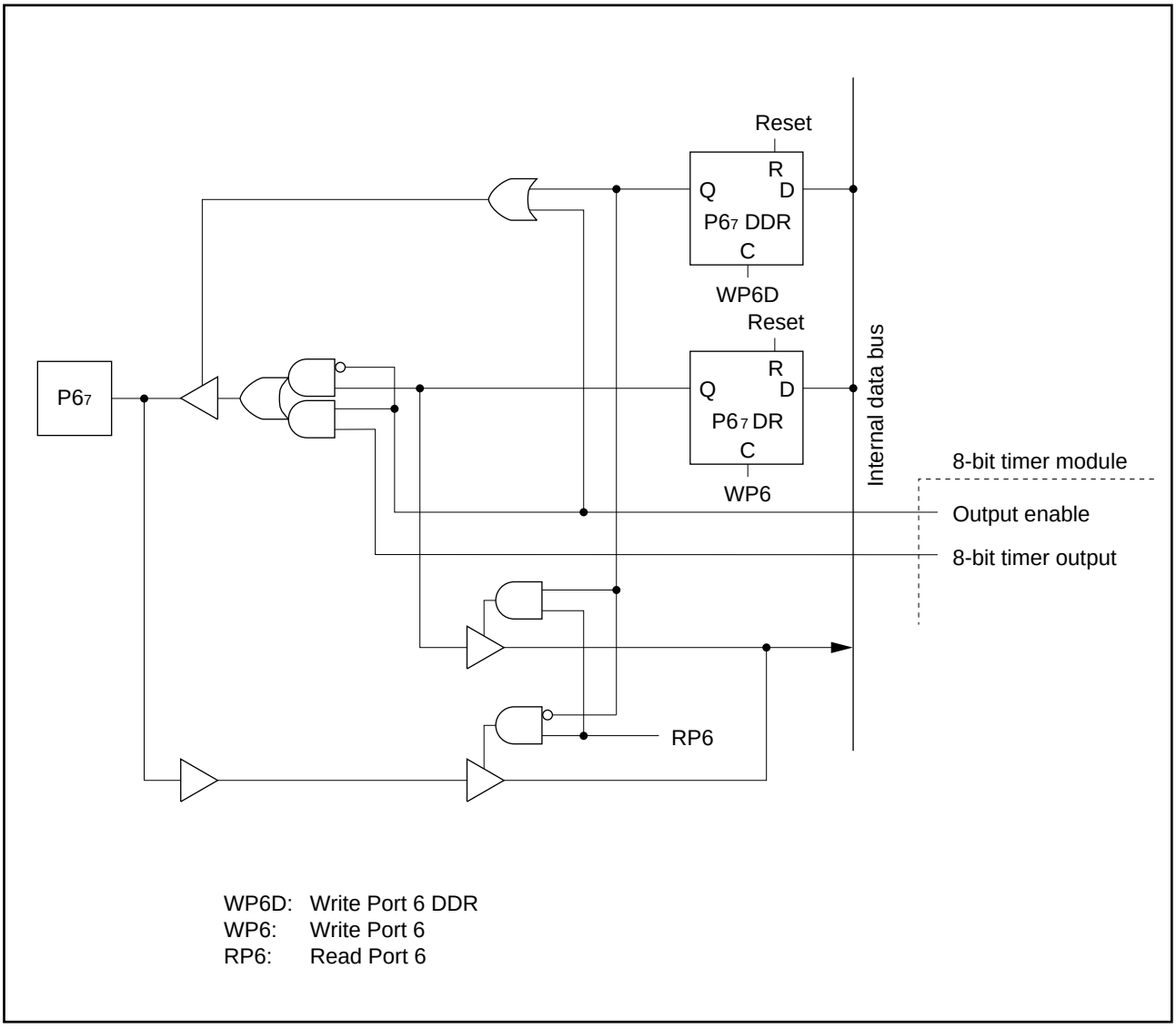

Figure 5-18. Port 6 Schematic Diagram (Pin P6$_7$)

5.8 Port 7

Port 7 is an 8-bit input port that also provides the analog input pins for the A/D converter module. The pin functions are the same in both the expanded and single-chip modes.

Table 5-17 lists the pin functions. Table 5-18 describes the port 7 data register, which simply consists of connections of the port 7 pins to the internal data bus. Figure 5-19 shows a schematic diagram of port 7.

Table 5-17. Port 7 Pin Functions (Modes 1 to 3)

Usage	Pin functions							
I/O port	$P7_0$	$P7_1$	$P7_2$	$P7_3$	$P7_4$	$P7_5$	$P7_6$	$P7_7$
Analog input	AN_0	AN_1	AN_2	AN_3	AN_4	AN_5	AN_6	AN_7

Table 5-18. Port 7 Register

Name	Abbreviation	Read/Write	Initial value	Address
Port 7 data register	P7DR	R	Undetermined	H'FFBE

Port 7 Data Register (P7DR)—H'FFBE

Bit	7	6	5	4	3	2	1	0
	$P7_7$	$P7_6$	$P7_5$	$P7_4$	$P7_3$	$P7_2$	$P7_1$	$P7_0$
Initial value	*	*	*	*	*	*	*	*
Read/Write	R	R	R	R	R	R	R	R

Note: * Depends on the levels of pins $P7_7$ to $P7_0$.

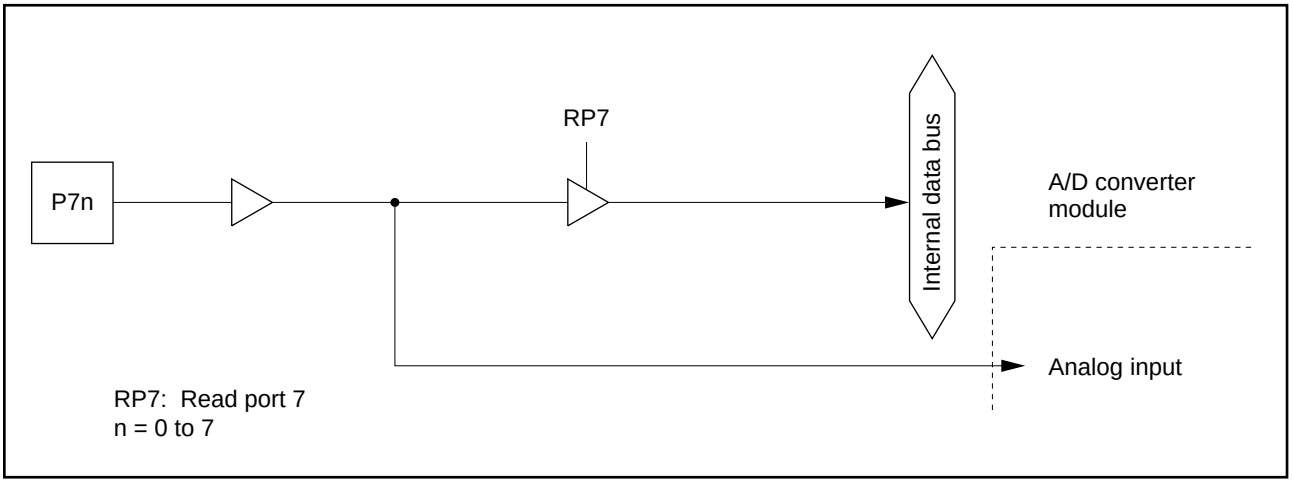

Figure 5-19. Port 7 Schematic Diagram

Section 6. 16-Bit Free-Running Timer

6.1 Overview

The H8/329 Series has an on-chip 16-bit free-running timer (FRT) module that uses a 16-bit free-running counter as a time base. Applications of the FRT module include rectangular-wave output (up to two independent waveforms), input pulse width measurement, and measurement of external clock periods.

6.1.1 Features

The features of the free-running timer module are listed below.

- Selection of four clock sources
  The free-running counter can be driven by an internal clock source (Ø/2, Ø/8, or Ø/32), or an external clock input (enabling use as an external event counter).
- Two independent comparators
  Each comparator can generate an independent waveform.
- Four input capture channels
  The current count can be captured on the rising or falling edge (selectable) of an input signal. The four input capture registers can be used separately, or in a buffer mode.
- Counter can be cleared under program control
  The free-running counters can be cleared on compare-match A.
- Seven independent interrupts
  Compare-match A and B, input capture A to D, and overflow interrupts are requested independently.

6.1.2 Block Diagram

Figure 6-1 shows a block diagram of the free-running timer.

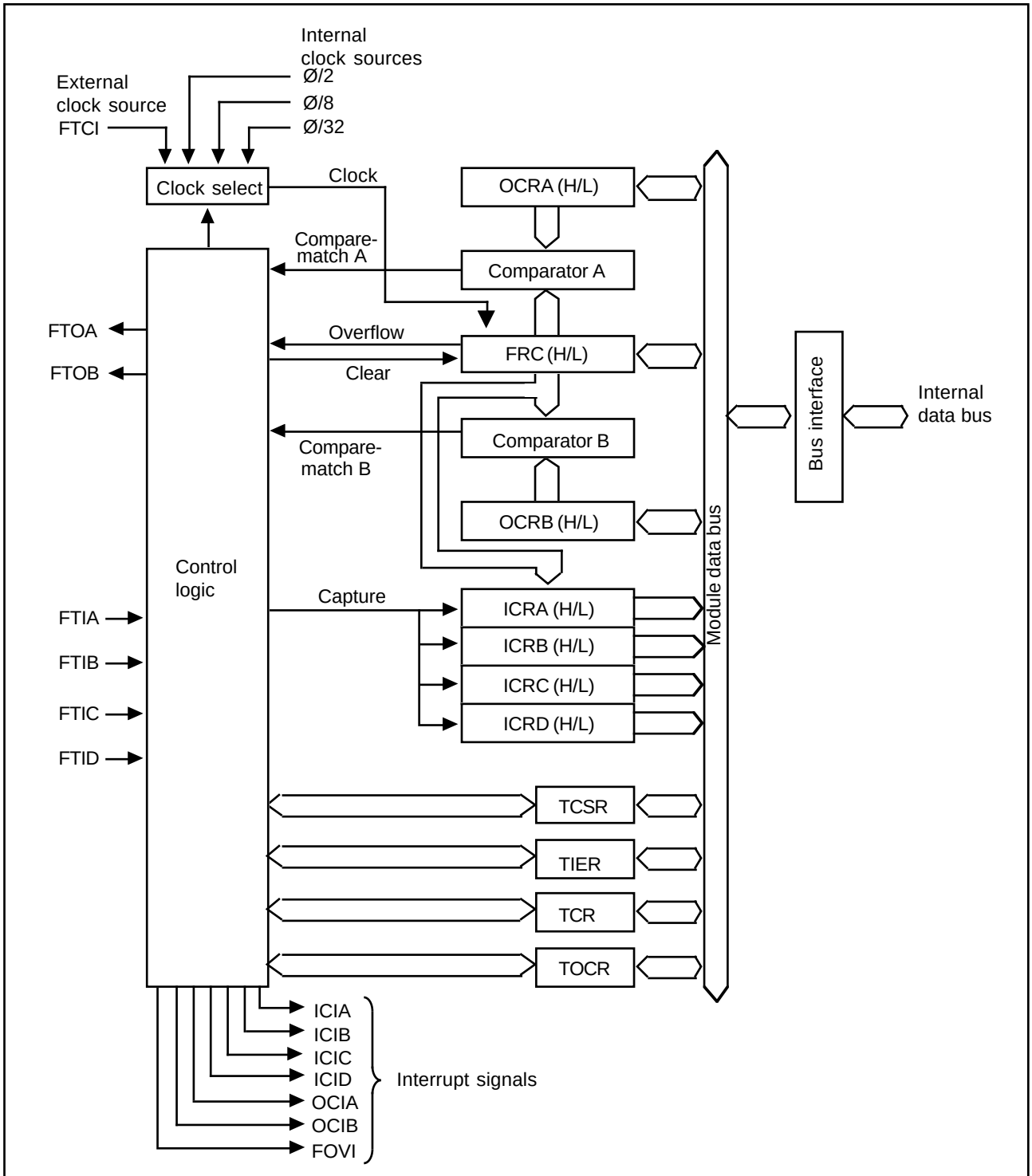

FRC:	Free-Running Counter (16 bits)	TIER:	Timer Interrupt Enable Register (8 bits)
OCRA, B:	Output Compare Register A, B (16 bits)	TCR:	Timer Control Register (8 bits)
ICRA, B, C, D:	Input Capture Register A, B, C, D (16 bits)	TOCR:	Timer Output Compare Control Register (8 bits)
TCSR:	Timer Control/Status Register (8 bits)		

Figure 6-1. Block Diagram of 16-Bit Free-Running Timer

6.1.3 Input and Output Pins

Table 6-1 lists the input and output pins of the free-running timer module.

Table 6-1. Input and Output Pins of Free-Running Timer Module

Name	Abbreviation	I/O	Function
Counter clock input	FTCI	Input	Input of external free-running counter clock signal
Output compare A	FTOA	Output	Output controlled by comparator A
Output compare B	FTOB	Output	Output controlled by comparator B
Input capture A	FTIA	Input	Trigger for capturing current count into input capture register A
Input capture B	FTIB	Input	Trigger for capturing current count into input capture register B
Input capture C	FTIC	Input	Trigger for capturing current count into input capture register C
Input capture D	FTID	Input	Trigger for capturing current count into input capture register D

6.1.4 Register Configuration

Table 6-2 lists the registers of the free-running timer module.

Table 6-2. Register Configuration

Name	Abbreviation	R/W	Initial value	Address
Timer interrupt enable register	TIER	R/W	H'01	H'FF90
Timer control/status register	TCSR	R/(W)*1	H'00	H'FF91
Free-running counter (High)	FRC (H)	R/W	H'00	H'FF92
Free-running counter (Low)	FRC (L)	R/W	H'00	H'FF93
Output compare register A/B (High)*2	OCRA/B (H)	R/W	H'FF	H'FF94*2
Output compare register A/B (Low)*2	OCRA/B (L)	R/W	H'FF	H'FF95*2
Timer control register	TCR	R/W	H'00	H'FF96
Timer output compare control register	TOCR	R/W	H'E0	H'FF97
Input capture register A (High)	ICRA (H)	R	H'00	H'FF98
Input capture register A (Low)	ICRA (L)	R	H'00	H'FF99

Notes: *1 Software can write a “0” to clear bits 7 to 1, but cannot write a “1” in these bits.
*2 OCRA and OCRB share the same addresses. Access is controlled by the OCRS bit in TOCR.

Table 6-2. Register Configuration (cont.)

Name	Abbreviation	R/W	Initial value	Address
Input capture register B (High)	ICRB (H)	R	H'00	H'FF9A
Input capture register B (Low)	ICRB (L)	R	H'00	H'FF9B
Input capture register C (High)	ICRC (H)	R	H'00	H'FF9C
Input capture register C (Low)	ICRC (L)	R	H'00	H'FF9D
Input capture register D (High)	ICRD (H)	R	H'00	H'FF9E
Input capture register D (Low)	ICRD (L)	R	H'00	H'FF9F

6.2 Register Descriptions

6.2.1 Free-Running Counter (FRC)—H'FF92

Bit	15	14	13	12	11	10	9	8	7	6	5	4	3	2	1	0
Initial value	0	0	0	0	0	0	0	0	0	0	0	0	0	0	0	0
Read/ Write	R/W	R/W	R/W	R/W	R/W	R/W	R/W	R/W	R/W	R/W	R/W	R/W	R/W	R/W	R/W	R/W

The FRC is a 16-bit readable/writable up-counter that increments on an internal pulse generated from a clock source. The clock source is selected by the clock select 1 and 0 bits (CKS1 and CKS0) of the timer control register (TCR).

When the FRC overflows from H'FFFF to H'0000, the overflow flag (OVF) in the timer control/status register (TCSR) is set to “1.”

Because the FRC is a 16-bit register, a temporary register (TEMP) is used when the FRC is written or read. See section 6.3, “CPU Interface,” for details.

The FRC is initialized to H'0000 at a reset and in the standby modes. It can also be cleared by compare-match A.

6.2.2 Output Compare Registers A and B (OCRA and OCRB)—H'FF94

Bit	15	14	13	12	11	10	9	8	7	6	5	4	3	2	1	0
Initial value	1	1	1	1	1	1	1	1	1	1	1	1	1	1	1	1
Read/ Write	R/W	R/W	R/W	R/W	R/W	R/W	R/W	R/W	R/W	R/W	R/W	R/W	R/W	R/W	R/W	R/W

OCRA and OCRB are 16-bit readable/writable registers, the contents of which are continually compared with the value in the FRC. When a match is detected, the corresponding output compare flag (OCFA or OCFB) is set in the timer control/status register (TCSR).

In addition, if the output enable bit (OEA or OEB) in the timer output compare control register (TOCR) is set to “1,” when the output compare register and FRC values match, the logic level selected by the output level bit (OLVLA or OLVLB) in the TOCR is output at the output compare pin (FTOA or FTOB).

OCRA and OCRB share the same address. They are differentiated by the OCRS bit in the TOCR. A temporary register (TEMP) is used for write access, as explained in section 6.3, “CPU Interface.”

OCRA and OCRB are initialized to H'FFFF at a reset and in the standby modes.

6.2.3 Input Capture Registers A to D (ICRA to ICRD)—H'FF98, H'FF9A, H'FF9C, H'FF9E

Bit	15	14	13	12	11	10	9	8	7	6	5	4	3	2	1	0
Initial value	0	0	0	0	0	0	0	0	0	0	0	0	0	0	0	0
Read/ Write	R	R	R	R	R	R	R	R	R	R	R	R	R	R	R	R

Each input capture register is a 16-bit read-only register.

When the rising or falling edge of the signal at an input capture pin (FTIA to FTID) is detected, the current value of the FRC is copied to the corresponding input capture register (ICRA to ICRD).* At the same time, the corresponding input capture flag (ICFA to ICFD) in the timer control/status register (TCSR) is set to “1.” The input capture edge is selected by the input edge select bits (IEDGA to IEDGD) in the timer control register (TCR).

Note: * The FRC contents are transferred to the input capture register regardless of the value of the input capture flag (ICFA/B/C/D).

Input capture can be buffered by using the input capture registers in pairs. When the BUFEA bit in the timer control register (TCR) is set to “1,” ICRC is used as a buffer register for ICRA as shown in figure 6-2. When an FTIA input is received, the old ICRA contents are moved into ICRC, and the new FRC count is copied into ICRA.

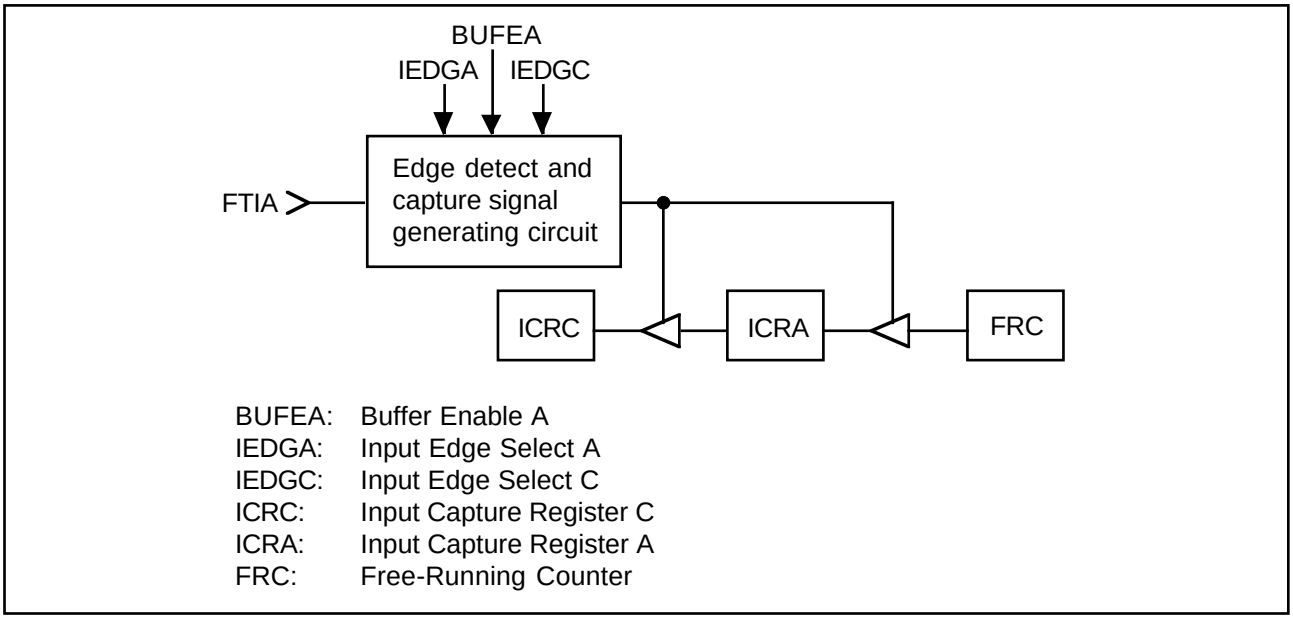

Figure 6-2. Input Capture Buffering

Similarly, when the BUFEB bit in TIER is set to “1,” ICRD is used as a buffer register for ICRB.

When input capture is buffered, if the two input edge bits are set to different values (IEDGA ≠ IEDGC or IEDGB ≠ IEDGD), then input capture is triggered on both the rising and falling edges of the FTIA or FTIB input signal. If the two input edge bits are set to the same value (IEDGA = IEDGC or IEDGB = IEDGD), then input capture is triggered on only one edge.

Table 6-3. Buffered Input Capture Edge Selection (Example)

IEDGA	IEDGC	Input Capture Edge
0	0	Captured on falling edge of input capture A (FTIA) (Initial value)
0	1	Captured on both rising and falling edges of input capture A (FTIA)
1	0	
1	1	Captured on rising edge of input capture A (FTIA)

Because the input capture registers are 16-bit registers, a temporary register (TEMP) is used when they are read. See section 6.3, “CPU Interface,” for details.

To ensure input capture, the width of the input capture pulse (FTIA, FTIB, FTIC, FTID) should be at least 1.5 system clock periods (1.5·Ø). When triggering is enabled on both edges, the input capture pulse width should be at least 2.5 system clock periods.

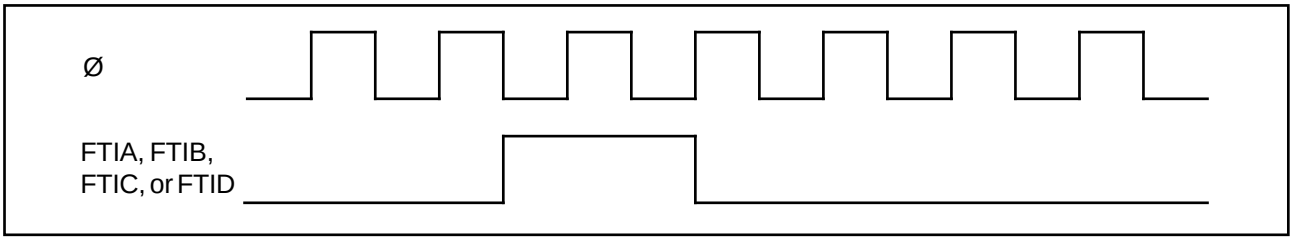

Figure 6-3. Minimum Input Capture Pulse Width

The input capture registers are initialized to H'0000 at a reset and in the standby modes.

Note: When input capture is detected, the FRC value is transferred to the input capture register even if the input capture flag is already set.

6.2.4 Timer Interrupt Enable Register (TIER)—H'FF90

Bit	7	6	5	4	3	2	1	0
	ICIAE	ICIBE	ICICE	ICIDE	OCIAE	OCIBE	OVIE	—
Initial value	0	0	0	0	0	0	0	1
Read/Write	R/W	R/W	R/W	R/W	R/W	R/W	R/W	—

The TIER is an 8-bit readable/writable register that enables and disables interrupts.

The TIER is initialized to H'01 (all interrupts disabled) at a reset and in the standby modes.

Bit 7—Input Capture Interrupt A Enable (ICIAE): This bit selects whether to request input capture interrupt A (ICIA) when input capture flag A (ICFA) in the timer status/control register (TCSR) is set to “1.”

Bit 7

ICIAE	Description	
0	Input capture interrupt request A (ICIA) is disabled.	(Initial value)
1	Input capture interrupt request A (ICIA) is enabled.	

Bit 6—Input Capture Interrupt B Enable (ICIBE): This bit selects whether to request input capture interrupt B (ICIB) when input capture flag B (ICFB) in the timer status/control register (TCSR) is set to “1.”

Bit 6

ICIBE	Description	
0	Input capture interrupt request B (ICIB) is disabled.	(Initial value)
1	Input capture interrupt request B (ICIB) is enabled.	

Bit 5—Input Capture Interrupt C Enable (ICICE): This bit selects whether to request input capture interrupt C (ICIC) when input capture flag C (ICFC) in the timer status/control register (TCSR) is set to “1.”

Bit 5

ICICE	Description	
0	Input capture interrupt request C (ICIC) is disabled.	(Initial value)
1	Input capture interrupt request C (ICIC) is enabled.	

Bit 4—Input Capture Interrupt D Enable (ICIDE): This bit selects whether to request input capture interrupt D (ICID) when input capture flag D (ICFD) in the timer status/control register (TCSR) is set to “1.”

Bit 4

ICIDE	Description	
0	Input capture interrupt request D (ICID) is disabled.	(Initial value)
1	Input capture interrupt request D (ICID) is enabled.	

Bit 3—Output Compare Interrupt A Enable (OCIAE): This bit selects whether to request output compare interrupt A (OCIA) when output compare flag A (OCFA) in the timer status/control register (TCSR) is set to “1.”

Bit 3

OCIAE	Description	
0	Output compare interrupt request A (OCIA) is disabled.	(Initial value)
1	Output compare interrupt request A (OCIA) is enabled.	

Bit 2—Output Compare Interrupt B Enable (OCIBE): This bit selects whether to request output compare interrupt B (OCIB) when output compare flag B (OCFB) in the timer status/control register (TCSR) is set to “1.”

Bit 2

OCIBE	Description	
0	Output compare interrupt request B (OCIB) is disabled.	(Initial value)
1	Output compare interrupt request B (OCIB) is enabled.	

Bit 1—Timer Overflow Interrupt Enable (OVIE): This bit selects whether to request a free-running timer overflow interrupt (FOVI) when the timer overflow flag (OVF) in the timer status/control register (TCSR) is set to “1.”

Bit 1

OVIE	Description	
0	Timer overflow interrupt request (FOVI) is disabled.	(Initial value)
1	Timer overflow interrupt request (FOVI) is enabled.	

Bit 0—Reserved: This bit cannot be modified and is always read as “1.”

6.2.5 Timer Control/Status Register (TCSR)—H'FF91

Bit	7	6	5	4	3	2	1	0
	ICFA	ICFB	ICFC	ICFD	OCFA	OCFB	OVF	CCLRA
Initial value	0	0	0	0	0	0	0	0
Read/Write	R/(W)*	R/(W)*	R/(W)*	R/(W)*	R/(W)*	R/(W)*	R/(W)*	R/W

The TCSR is an 8-bit readable and partially writable* register that contains the seven interrupt flags and specifies whether to clear the counter on compare-match A (when the FRC and OCRA values match).

Note: * Software can write a “0” in bits 7 to 1 to clear the flags, but cannot write a “1” in these bits.

The TCSR is initialized to H'00 at a reset and in the standby modes.

Bit 7—Input Capture Flag A (ICFA): This status bit is set to “1” to flag an input capture A event. If BUFEA = “0,” ICFA indicates that the FRC value has been copied to ICRA. If BUFEA = “1,” ICFA indicates that the old ICRA value has been moved into ICRC and the new FRC value has been copied to ICRA.

ICFA must be cleared by software. It is set by hardware, however, and cannot be set by software.

Bit 7

ICFA	Description	
0	To clear ICFA, the CPU must read ICFA after it has been set to “1,” then write a “0” in this bit.	(Initial value)
1	This bit is set to 1 when an FTIA input signal causes the FRC value to be copied to ICRA.	

Bit 6—Input Capture Flag B (ICFB): This status bit is set to “1” to flag an input capture B event. If BUFEB = “0,” ICFB indicates that the FRC value has been copied to ICRB. If BUFEB = “1,” ICFB indicates that the old ICRB value has been moved into ICRC and the new FRC value has been copied to ICRB.

ICFB must be cleared by software. It is set by hardware, however, and cannot be set by software.

Bit 6

ICFB	Description	
0	To clear ICFB, the CPU must read ICFB after it has been set to “1,” then write a “0” in this bit.	(Initial value)
1	This bit is set to 1 when an FTIB input signal causes the FRC value to be copied to ICRB.	

Bit 5—Input Capture Flag C (ICFC): This status bit is set to “1” to flag input of a rising or falling edge of FTIC as selected by the IEDGC bit. When BUFEA = “0,” this indicates capture of the FRC count in ICRC. When BUFEA = “1,” however, the FRC count is not captured, so ICFC becomes simply an external interrupt flag. In other words, the buffer mode frees FTIC for use as a general-purpose interrupt signal (which can be enabled or disabled by the ICICE bit).

ICFC must be cleared by software. It is set by hardware, however, and cannot be set by software.

Bit 5

ICFC	Description	
0	To clear ICFC, the CPU must read ICFC after it has been set to “1,” then write a “0” in this bit.	(Initial value)
1	This bit is set to 1 when an FTIC input signal is received.	

Bit 4—Input Capture Flag D (ICFD): This status bit is set to “1” to flag input of a rising or falling edge of FTID as selected by the IEDGD bit. When BUFEB = “0,” this indicates capture of the FRC count in ICRD. When BUFEB = “1,” however, the FRC count is not captured, so ICFD becomes simply an external interrupt flag. In other words, the buffer mode frees FTID for use as a general-purpose interrupt signal (which can be enabled or disabled by the ICIDE bit).

ICFD must be cleared by software. It is set by hardware, however, and cannot be set by software.

Bit 4

ICFD	Description	
0	To clear ICFD, the CPU must read ICFD after it has been set to “1,” then write a “0” in this bit.	(Initial value)
1	This bit is set to 1 when an FTID input signal is received.	

Bit 3—Output Compare Flag A (OCFA): This status flag is set to “1” when the FRC value matches the OCRA value. This flag must be cleared by software. It is set by hardware, however, and cannot be set by software.

Bit 3

OCFA	Description	
0	To clear OCFA, the CPU must read OCFA after it has been set to “1,” then write a “0” in this bit.	(Initial value)
1	This bit is set to 1 when FRC = OCRA.	

Bit 2—Output Compare Flag B (OCFB): This status flag is set to “1” when the FRC value matches the OCRB value. This flag must be cleared by software. It is set by hardware, however, and cannot be set by software.

Bit 2

OCFB	Description	
0	To clear OCFB, the CPU must read OCFB after it has been set to “1,” then write a “0” in this bit.	(Initial value)
1	This bit is set to 1 when FRC = OCRB.	

Bit 1—Timer Overflow Flag (OVF): This status flag is set to “1” when the FRC overflows (changes from H'FFFF to H'0000). This flag must be cleared by software. It is set by hardware, however, and cannot be set by software.

Bit 1

OVF	Description	
0	To clear OVF, the CPU must read OVF after it has been set to “1,” then write a “0” in this bit.	(Initial value)
1	This bit is set to 1 when FRC changes from H'FFFF to H'0000.	

Bit 0—Counter Clear A (CCLRA): This bit selects whether to clear the FRC at compare-match A (when the FRC and OCRA values match).

Bit 0

CCLRA	Description	
0	The FRC is not cleared.	(Initial value)
1	The FRC is cleared at compare-match A.	

6.2.6 Timer Control Register (TCR)—H'FF96

Bit	7	6	5	4	3	2	1	0
	IEDGA	IEDGB	IEDGC	IEDGD	BUFEA	BUFEB	CKS1	CKS0
Initial value	0	0	0	0	0	0	0	0
Read/Write	R/W	R/W	R/W	R/W	R/W	R/W	R/W	R/W

The TCR is an 8-bit readable/writable register that selects the rising or falling edge of the input capture signals, enables the input capture buffer mode, and selects the FRC clock source.

The TCR is initialized to H'00 at a reset and in the standby modes.

Bit 7—Input Edge Select A (IEDGA): This bit causes input capture A events to be recognized on the selected edge of the input capture A signal (FTIA).

Bit 7

IEDGA	Description	
0	Input capture A events are recognized on the falling edge of FTIA.	(Initial value)
1	Input capture A events are recognized on the rising edge of FTIA.	

Bit 6—Input Edge Select B (IEDGB): This bit causes input capture B events to be recognized on the selected edge of the input capture B signal (FTIB).

Bit 6

IEDGB	Description	
0	Input capture B events are recognized on the falling edge of FTIB.	(Initial value)
1	Input capture B events are recognized on the rising edge of FTIB.	

Bit 5—Input Edge Select C (IEDGC): This bit causes input capture C events to be recognized on the selected edge of the input capture C signal (FTIC).

Bit 5

IEDGC	Description	
0	Input capture C events are recognized on the falling edge of FTIC.	(Initial value)
1	Input capture C events are recognized on the rising edge of FTIC.	

Bit 4—Input Edge Select D (IEDGD): This bit causes input capture D events to be recognized on the selected edge of the input capture D signal (FTID).

Bit 4

IEDGD	Description	
0	Input capture D events are recognized on the falling edge of FTID.	(Initial value)
1	Input capture D events are recognized on the rising edge of FTID.	

Bit 3—Buffer Enable A (BUFEA): This bit selects whether to use ICRC as a buffer register for ICRA.

Bit 3

BUFEA	Description	
0	ICRC is used for input capture C.	(Initial value)
1	ICRC is used as a buffer register for input capture A. Input C is not captured.	

Bit 2—Buffer Enable B (BUFEB): This bit selects whether to use ICRD as a buffer register for ICRB.

Bit 2

BUFEB	Description	
0	ICRD is used for input capture D.	(Initial value)
1	ICRD is used as a buffer register for input capture B. Input D is not captured.	

Bits 1 and 0—Clock Select (CKS1 and CKS0): These bits select external clock input or one of three internal clock sources for the FRC. External clock pulses are counted on the rising edge.

Bit 1 CKS1	Bit 0 CKS0	Description	
0	0	Ø/2 Internal clock source	(Initial value)
0	1	Ø/8 Internal clock source	
1	0	Ø/32 Internal clock source	
1	1	External clock source (rising edge)	

6.2.7 Timer Output Compare Control Register (TOCR)—H'FF97

Bit	7	6	5	4	3	2	1	0
	—	—	—	OCRS	OEA	OEB	OLVLA	OLVLB
Initial value	1	1	1	0	0	0	0	0
Read/Write	—	—	—	R/W	R/W	R/W	R/W	R/W

The TOCR is an 8-bit readable/writable register that controls the output compare function.

The TOCR is initialized to H'E0 at a reset and in the standby modes.

Bits 7 to 5—Reserved: These bits cannot be modified and are always read as “1.”

Bit 4—Output Compare Register Select (OCRS): When the CPU accesses addresses H'FF94 and H'FF95, this bit directs the access to either OCRA or OCRB. These two registers share the same addresses as follows:
Upper byte of OCRA and upper byte of OCRB: H'FF94
Lower byte of OCRA and lower byte of OCRB: H'FF95

Bit 4 OCRS	Description	
0	The CPU can access OCRA.	(Initial value)
1	The CPU can access OCRB.	

Bit 3—Output Enable A (OEA): This bit enables or disables output of the output compare A signal (FTOA).

Bit 3 OEA	Description	
0	Output compare A output is disabled.	(Initial value)
1	Output compare A output is enabled.	

Bit 2—Output Enable B (OEB): This bit enables or disables output of the output compare B signal (FTOB).

Bit 2

OEB	Description	
0	Output compare B output is disabled.	(Initial value)
1	Output compare B output is enabled.	

Bit 1—Output Level A (OLVLA): This bit selects the logic level to be output at the FTOA pin when the FRC and OCRA values match.

Bit 1

OLVLA	Description	
0	A “0” logic level (Low) is output for compare-match A.	(Initial value)
1	A “1” logic level (High) is output for compare-match A.	

Bit 0—Output Level B (OLVLB): This bit selects the logic level to be output at the FTOB pin when the FRC and OCRB values match.

Bit 0

OLVLB	Description	
0	A “0” logic level (Low) is output for compare-match B.	(Initial value)
1	A “1” logic level (High) is output for compare-match B.	

6.3 CPU Interface

The free-running counter (FRC), output compare registers (OCRA and OCRB), and input capture registers (ICRA to ICRD) are 16-bit registers, but they are connected to an 8-bit data bus. When the CPU accesses these registers, to ensure that both bytes are written or read simultaneously, the access is performed using an 8-bit temporary register (TEMP).

These registers are written and read as follows:

- **Register Write**
  When the CPU writes to the upper byte, the byte of write data is placed in TEMP. Next, when the CPU writes to the lower byte, this byte of data is combined with the byte in TEMP and all 16 bits are written in the register simultaneously.

- **Register Read**
  When the CPU reads the upper byte, the upper byte of data is sent to the CPU and the lower byte is placed in TEMP. When the CPU reads the lower byte, it receives the value in TEMP.
  (As an exception, when the CPU reads OCRA or OCRB, it reads both the upper and lower bytes directly, without using TEMP.)

Programs that access these registers should normally use word access. Equivalently, they may access first the upper byte, then the lower byte by two consecutive byte accesses. Data will not be transferred correctly if the bytes are accessed in reverse order, or if only one byte is accessed.

Coding Examples

To write the contents of general register R0 to OCRA: `MOV.W R0, @OCRA`
To transfer the contents of ICRA to general register R0: `MOV.W @ICRA, R0`

Figure 6-4 shows the data flow when the FRC is accessed. The other registers are accessed in the same way.

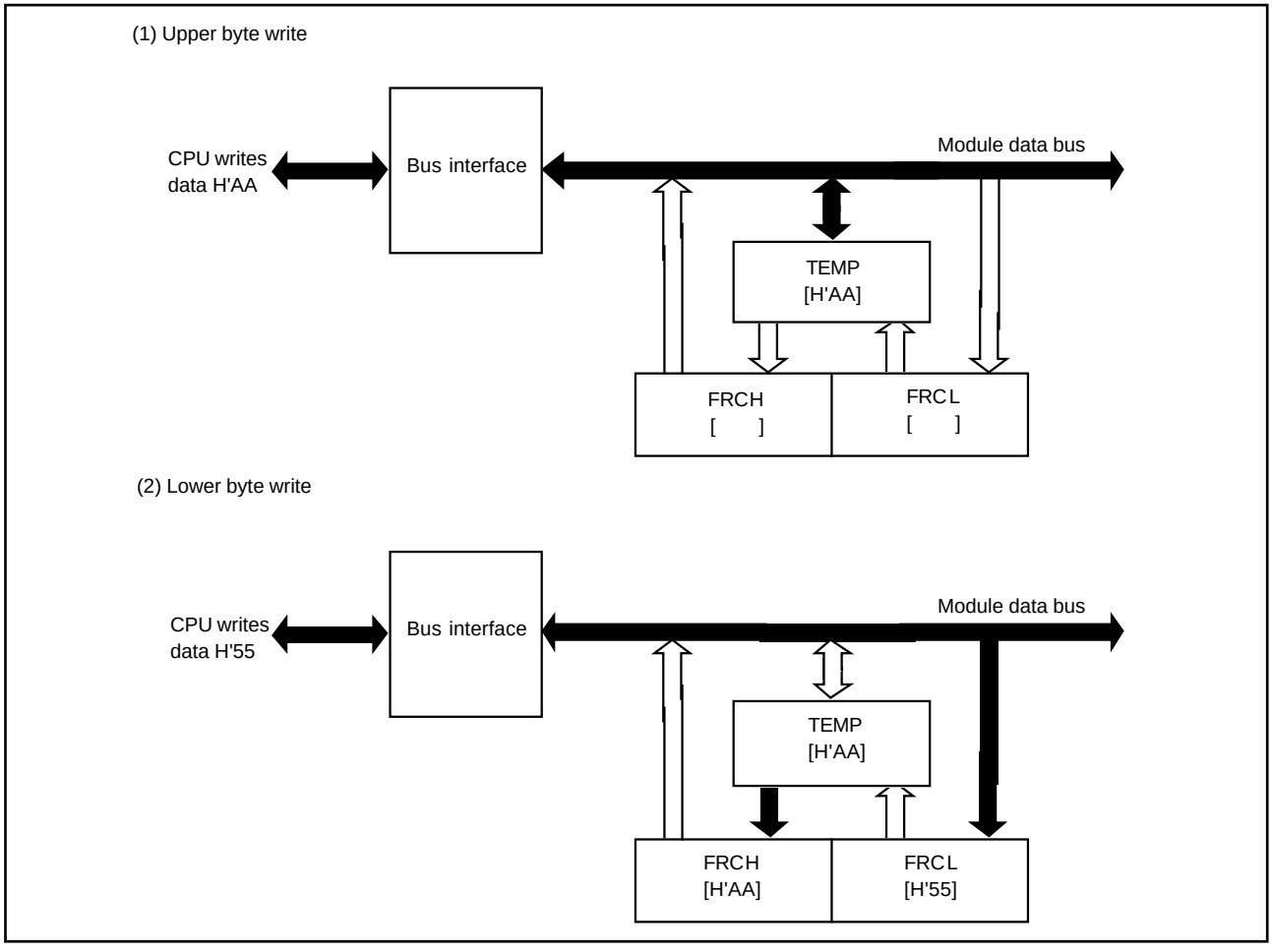

Figure 6-4 (a). Write Access to FRC (when CPU Writes H'AA55)

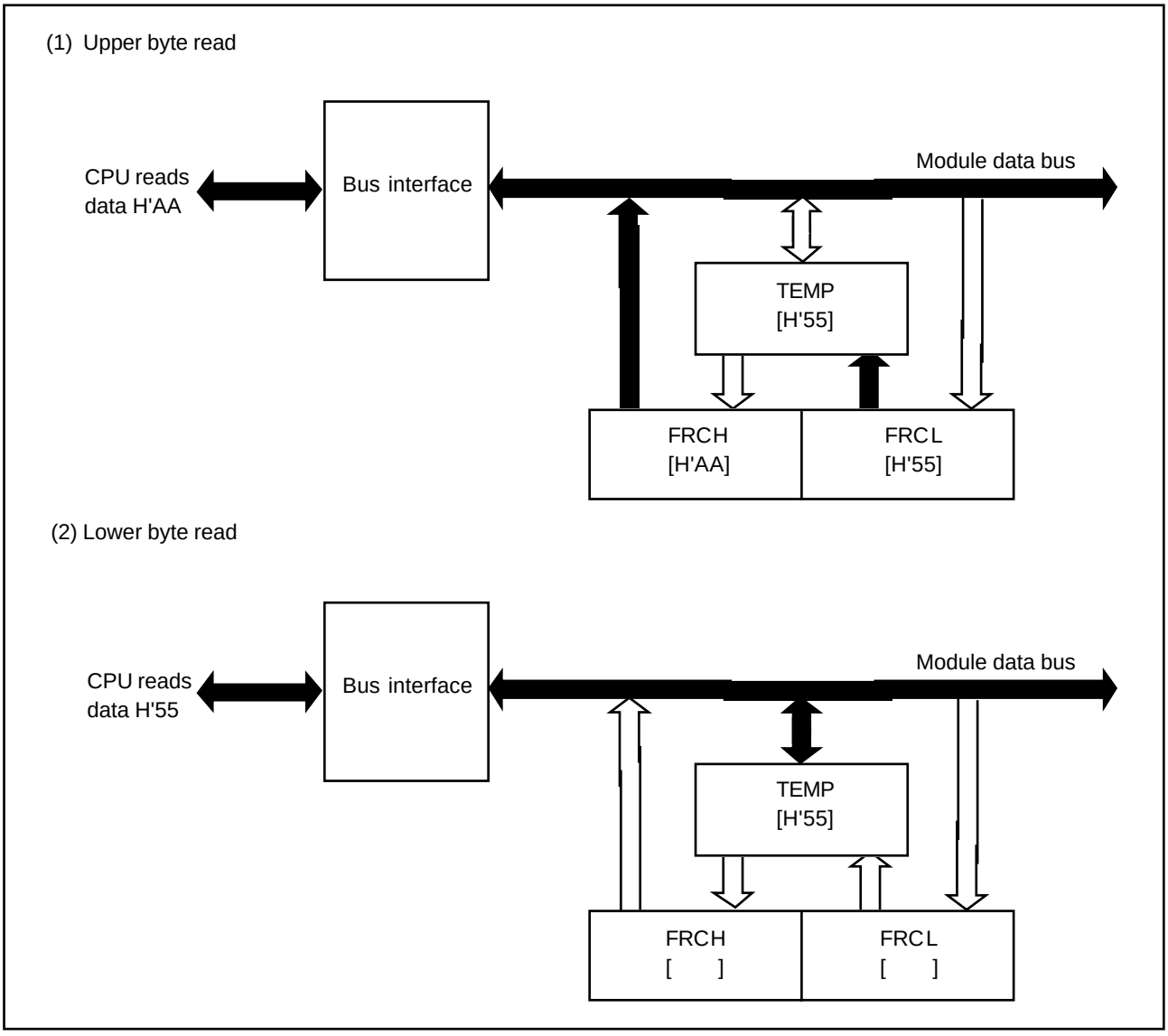

Figure 6-4 (b). Read Access to FRC (when FRC Contains H'AA55)

6.4 Operation

6.4.1 FRC Incrementation Timing

The FRC increments on a pulse generated once for each period of the selected (internal or external) clock source. The clock source is selected by bits CKS0 and CKS1 in the TCR.

Internal Clock: The internal clock sources (Ø/2, Ø/8, Ø/32) are created from the system clock (Ø) by a prescaler. The FRC increments on a pulse generated from the falling edge of the prescaler output. See figure 6-5.

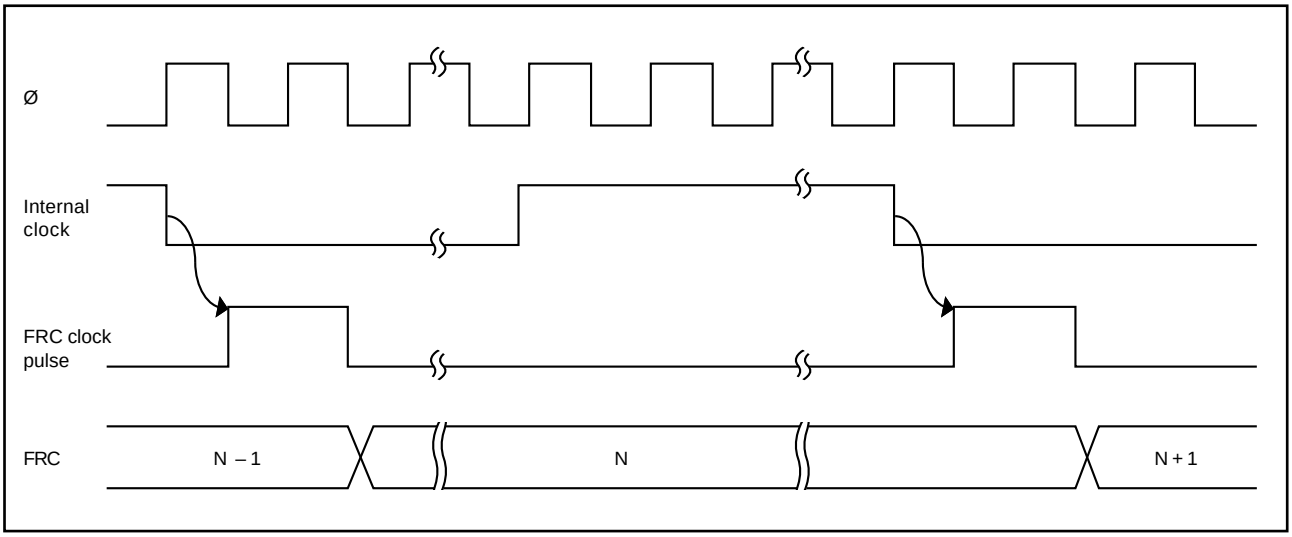

Figure 6-5. Increment Timing for Internal Clock Source

External Clock: If external clock input is selected, the FRC increments on the rising edge of the FTCI clock signal. Figure 6-6 shows the increment timing.

The pulse width of the external clock signal must be at least 1.5 system clock (Ø) periods. The counter will not increment correctly if the pulse width is shorter than 1.5 system clock periods.

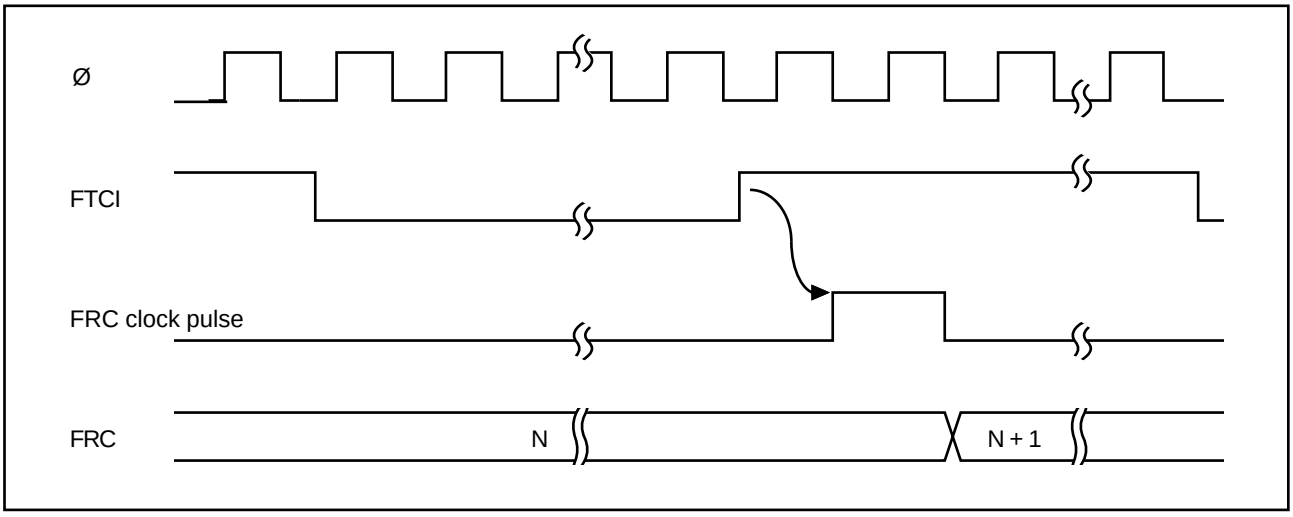

Figure 6-6. Increment Timing for External Clock Source

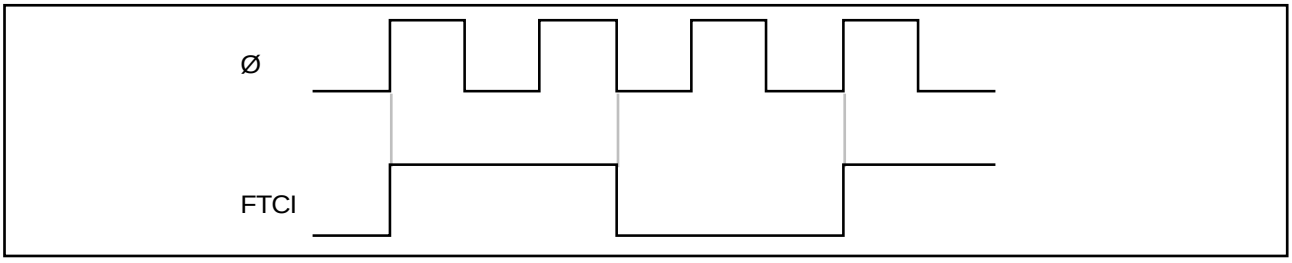

Figure 6-7. Minimum External Clock Pulse Width

6.4.2 Output Compare Timing

(1) Setting of Output Compare Flags A and B (OCFA and OCFB): The output compare flags are set to “1” by an internal compare-match signal generated when the FRC value matches the OCRA or OCRB value. This compare-match signal is generated at the last state in which the two values match, just before the FRC increments to a new value.

Accordingly, when the FRC and OCR values match, the compare-match signal is not generated until the next period of the clock source. Figure 6-8 shows the timing of the setting of the output compare flags.

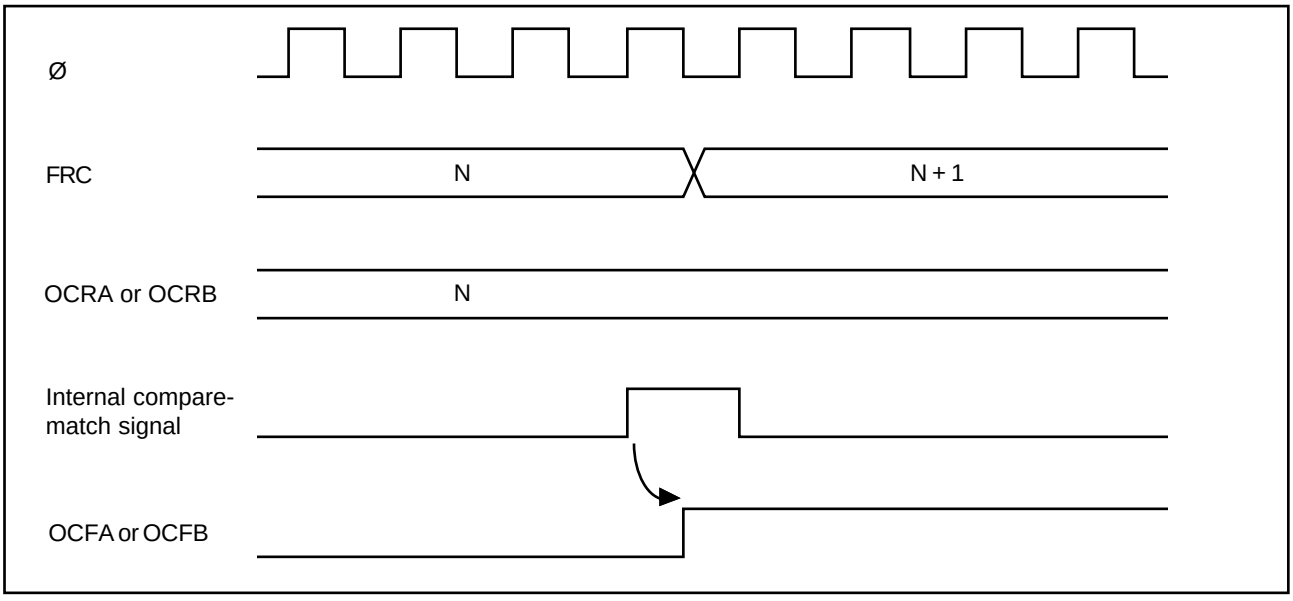

Figure 6-8. Setting of Output Compare Flags

(2) Output Timing: When a compare-match occurs, the logic level selected by the output level bit (OLVLA or OLVLB) in TOCR is output at the output compare pin (FTOA or FTOB). Figure 6-9 shows the timing of this operation for compare-match A.

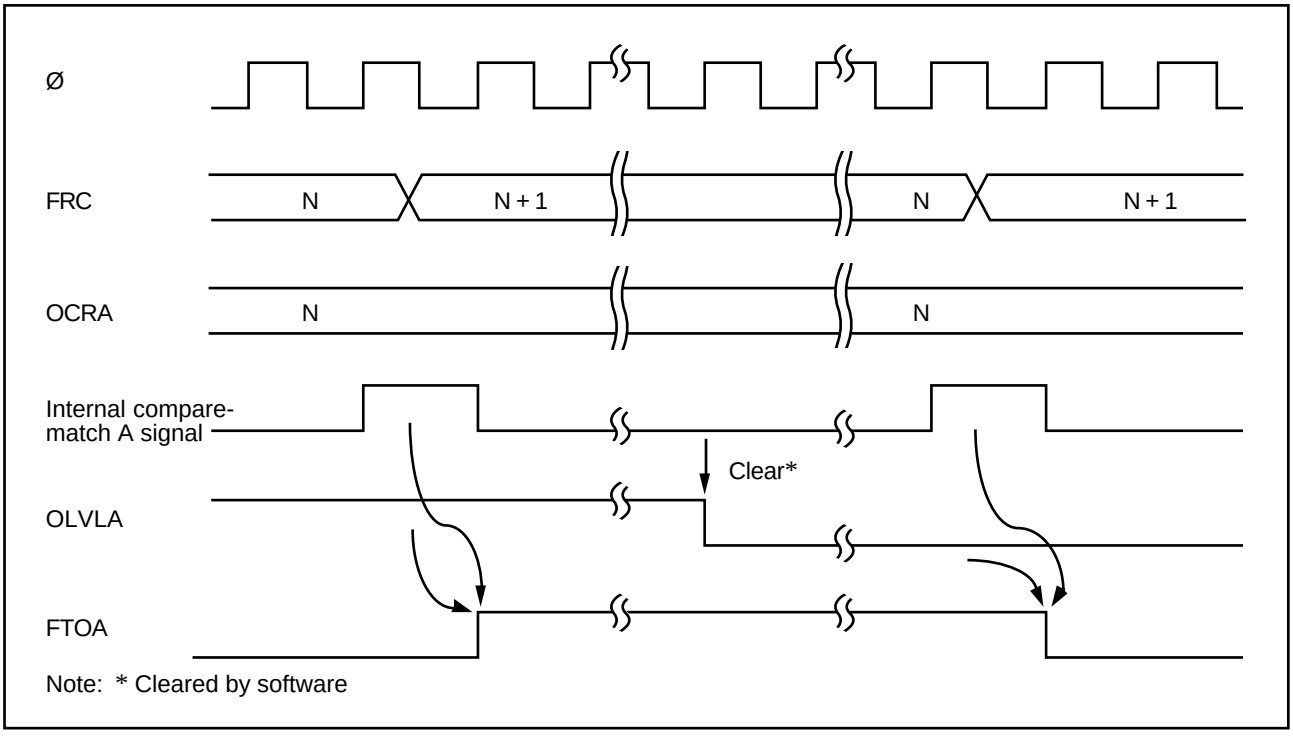

Figure 6-9. Timing of Output Compare A

(3) FRC Clear Timing: If the CCLRA bit in the TCSR is set to "1," the FRC is cleared when compare-match A occurs. Figure 6-10 shows the timing of this operation.

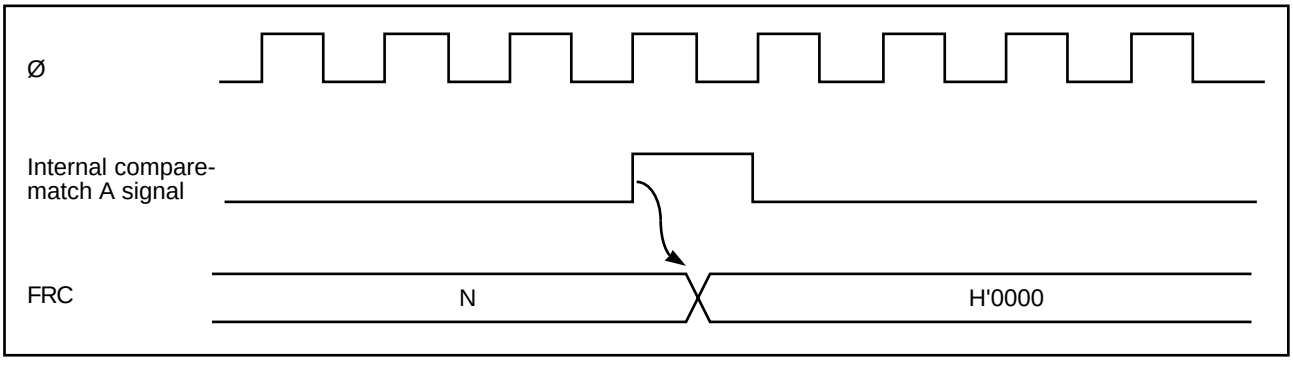

Figure 6-10. Clearing of FRC by Compare-Match A

6.4.3 Input Capture Timing

(1) Input Capture Timing: An internal input capture signal is generated from the rising or falling edge of the signal at the input capture pin FTIx (x = A, B, C, D), as selected by the corresponding IEDGx bit in TCR. Figure 6-11 shows the usual input capture timing when the rising edge is selected (IEDGx = "1").

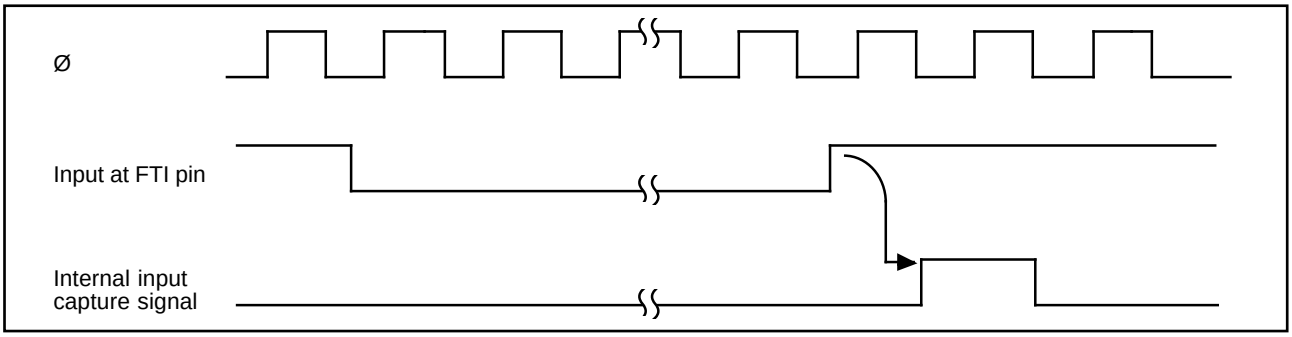

Figure 6-11. Input Capture Timing (Usual Case)

If the upper byte of ICRx is being read when the input capture signal arrives, the internal input capture signal is delayed by one state. Figure 6-12 shows the timing for this case.

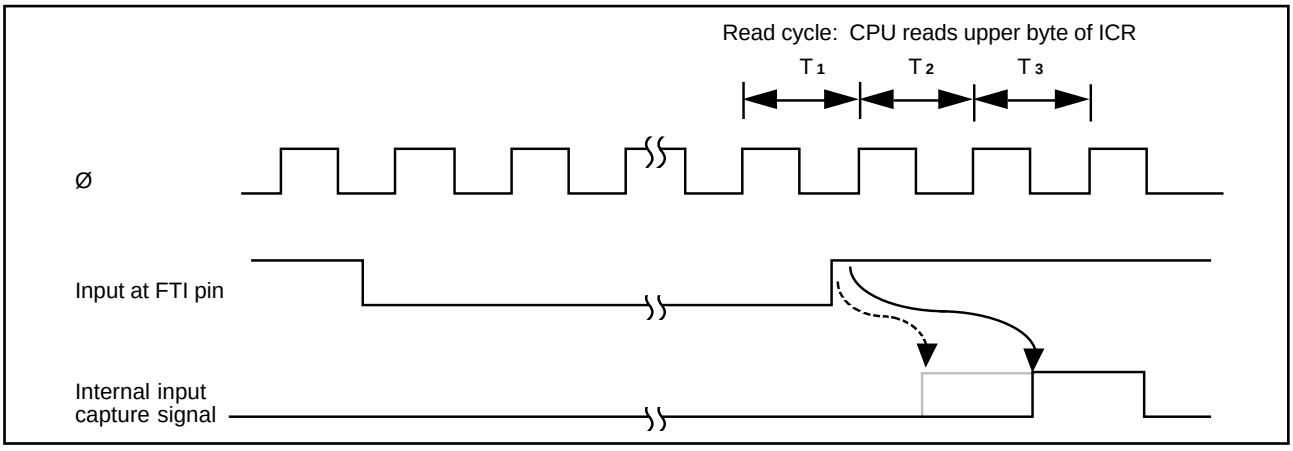

Figure 6-12. Input Capture Timing (1-State Delay)

In buffer mode, this delay occurs if the CPU is reading either of the two registers concerned. When ICRA and ICRC are used in buffer mode, for example, if the upper byte of either ICRA or ICRC is being read when the FTIA input arrives, the internal input capture signal is delayed by one state. Figure 6-13 shows the timing for this case. The case of ICRB and ICRD is similar.

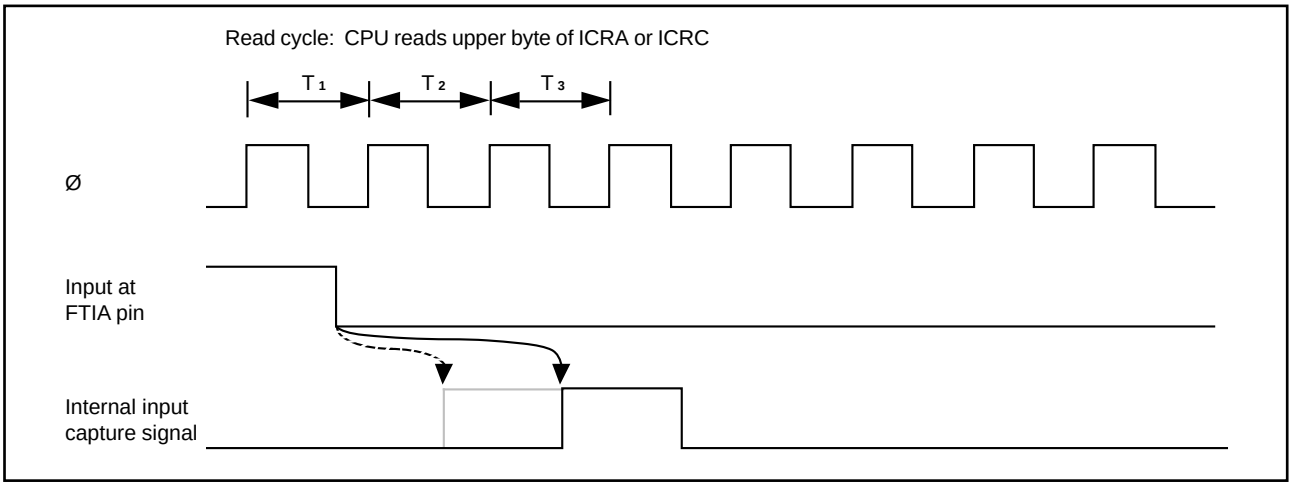

Figure 6-13. Input Capture Timing (1-State Delay, Buffer Mode)

Figure 6-14 shows how input capture operates when ICRA and ICRC are used in buffer mode and IEDGA and IEDGC are set to different values (IEDGA = 0 and IEDGC = 1, or IEDGA = 1 and IEDGC = 0), so that input capture is performed on both the rising and falling edges of FTIA.

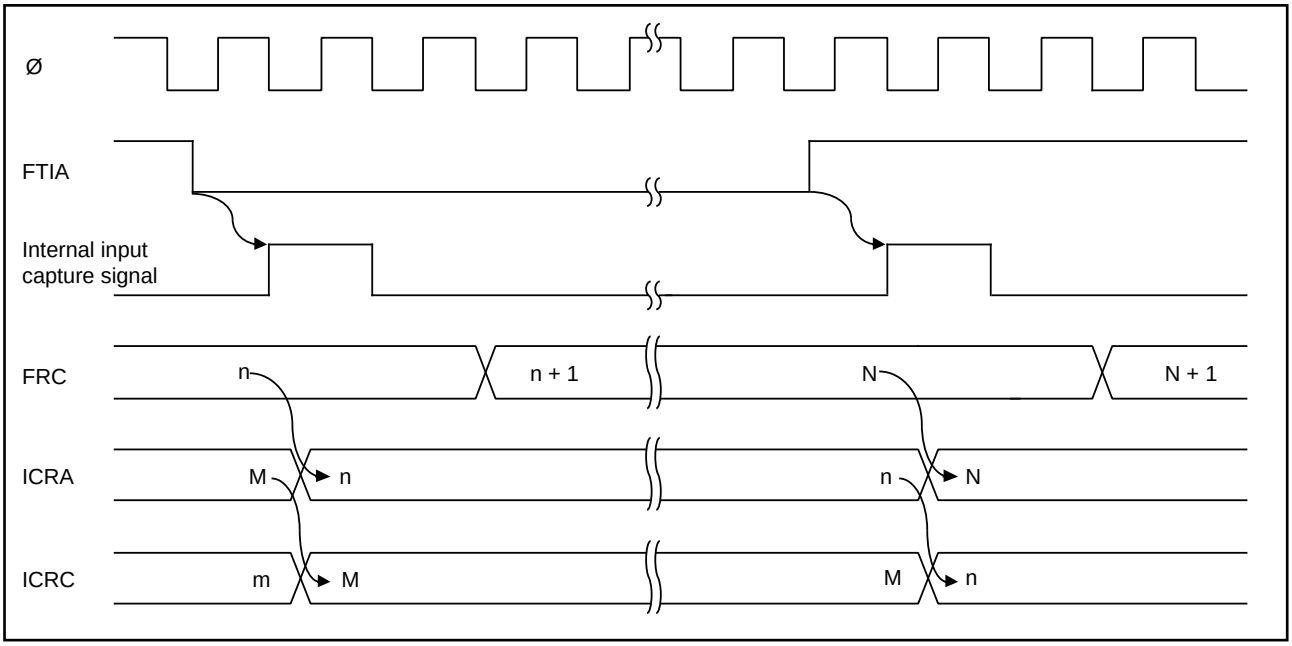

Figure 6-14. Buffered Input Capture with Both Edges Selected

In this mode, FTIC does not cause the FRC contents to be copied to ICRC. However, input capture flag C still sets on the edge of FTIC selected by IEDGC, and if the interrupt enable bit (ICICE) is set, a CPU interrupt is requested.

The situation when ICRB and ICRD are used in buffer mode is similar.

(2) Timing of Input Capture Flag (ICF) Setting: The input capture flag ICFx (x = A, B, C, D) is set to “1” by the internal input capture signal. Figure 6-15 shows the timing of this operation.

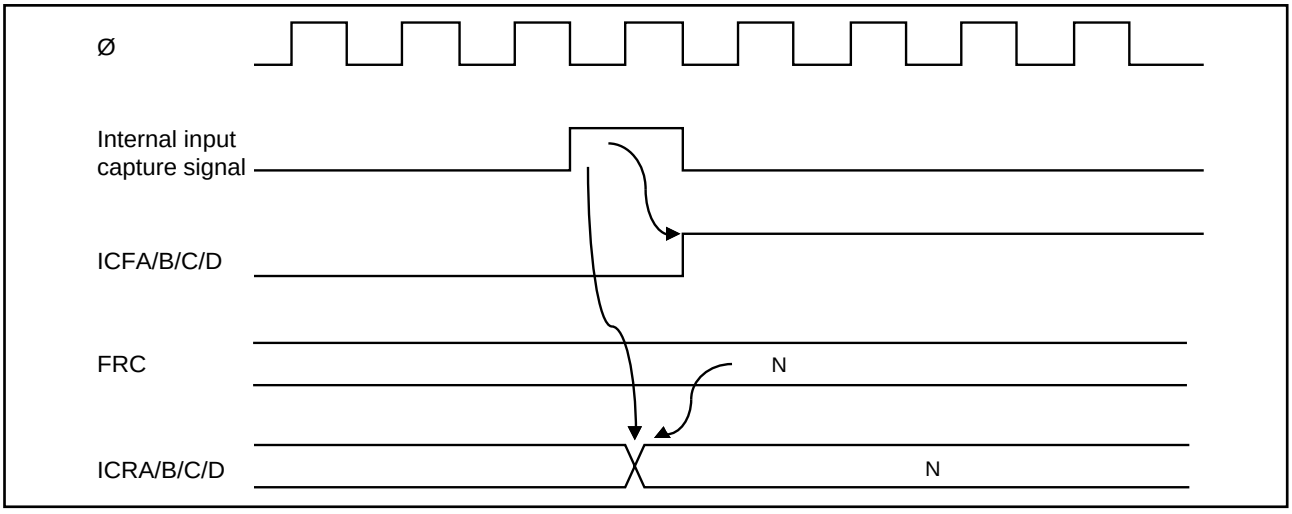

Figure 6-15. Setting of Input Capture Flag

6.4.4 Setting of FRC Overflow Flag (OVF)

The FRC overflow flag (OVF) is set to “1” when the FRC overflows (changes from H'FFFF to H'0000). Figure 6-16 shows the timing of this operation.

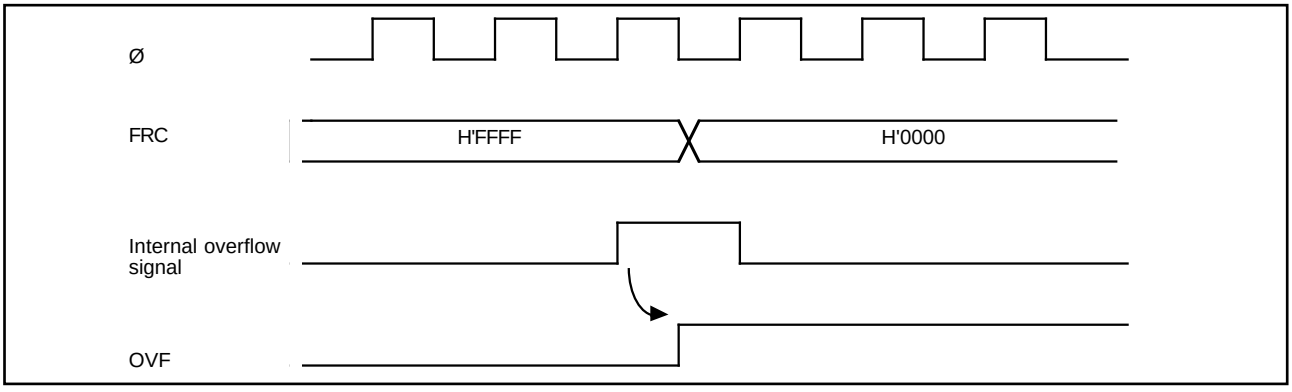

Figure 6-16. Setting of Overflow Flag (OVF)

6.5 Interrupts

The free-running timer can request seven types of interrupts: input capture A to D (ICIA, ICIB, ICIC, ICID), output compare A and B (OCIA and OCIB), and overflow (FOVI). Each interrupt is requested when the corresponding enable and flag bits are set. Independent signals are sent to the interrupt controller for each type of interrupt. Table 6-4 lists information about these interrupts.

Table 6-4. Free-Running Timer Interrupts

Interrupt	Description	Priority
ICIA	Requested when ICFA and ICIAE are set	High
ICIB	Requested when ICFB and ICIBE are set	↑
ICIC	Requested when ICFC and ICICE are set	
ICID	Requested when ICFD and ICIDE are set	
OCIA	Requested when OCFA and OCIAE are set	
OCIB	Requested when OCFB and OCIBE are set	↓
FOVI	Requested when OVF and OVIE are set	Low

6.6 Sample Application

In the example below, the free-running timer is used to generate two square-wave outputs with a 50% duty cycle and arbitrary phase relationship. The programming is as follows:

(1) The CCLRA bit in the TCSR is set to “1.”

(2) Each time a compare-match interrupt occurs, software inverts the corresponding output level bit in TOCR (OLVLA or OLVLB).

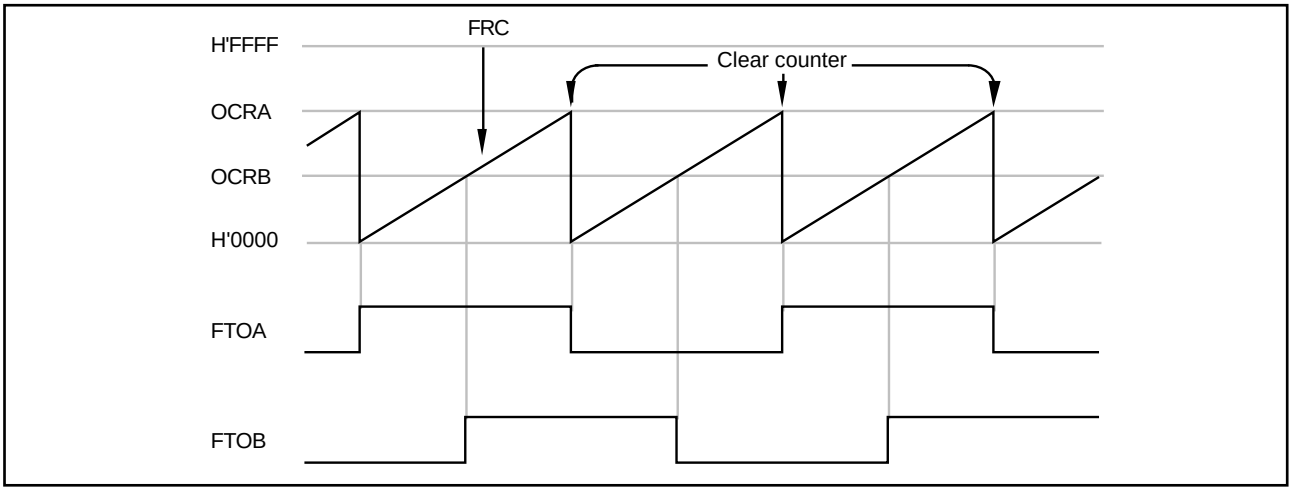

Figure 6-17. Square-Wave Output (Example)

6.7 Application Notes

Application programmers should note that the following types of contention can occur in the free-running timers.

(1) Contention between FRC Write and Clear: If an internal counter clear signal is generated during the T_3 state of a write cycle to the lower byte of the free-running counter, the clear signal takes priority and the write is not performed.

Figure 6-18 shows this type of contention.

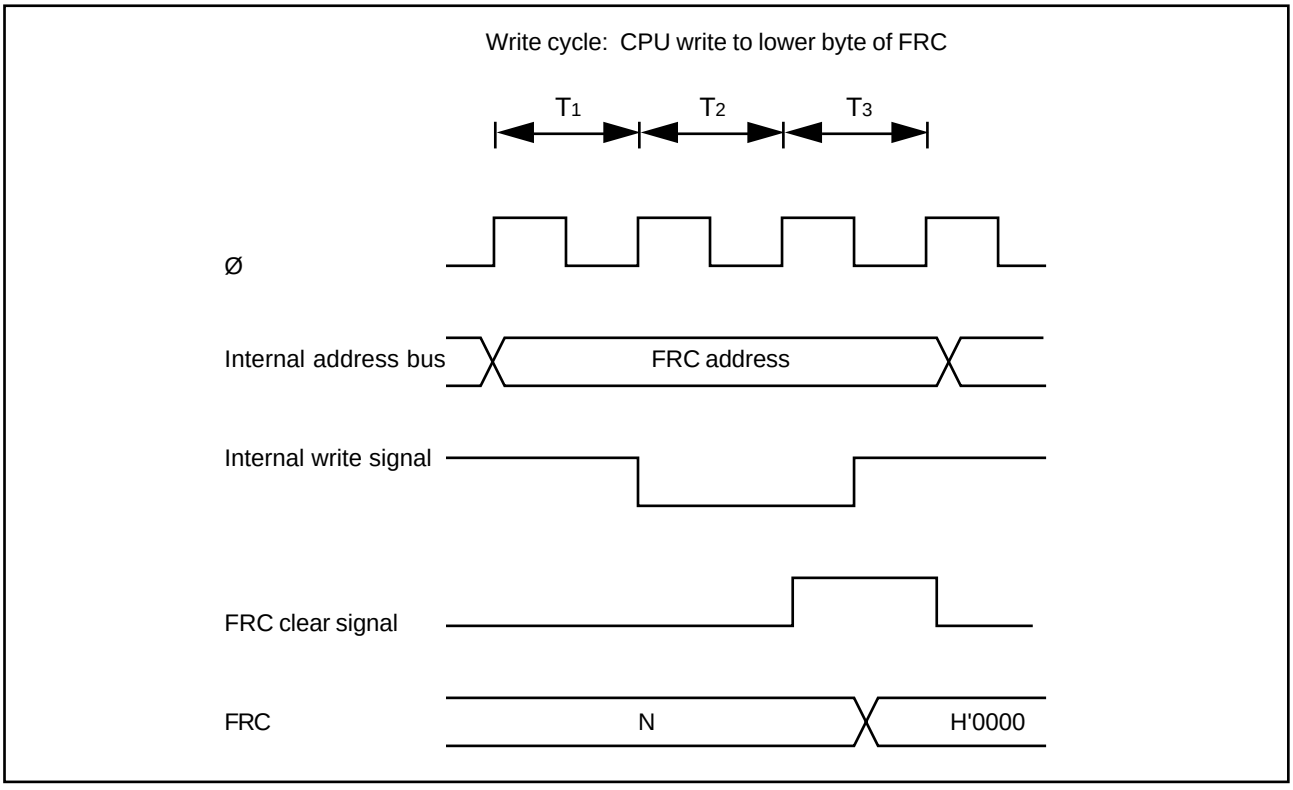

Figure 6-18. FRC Write-Clear Contention

(2) Contention between FRC Write and Increment: If an FRC increment pulse is generated during the T3 state of a write cycle to the lower byte of the free-running counter, the write takes priority and the FRC is not incremented.

Figure 6-19 shows this type of contention.

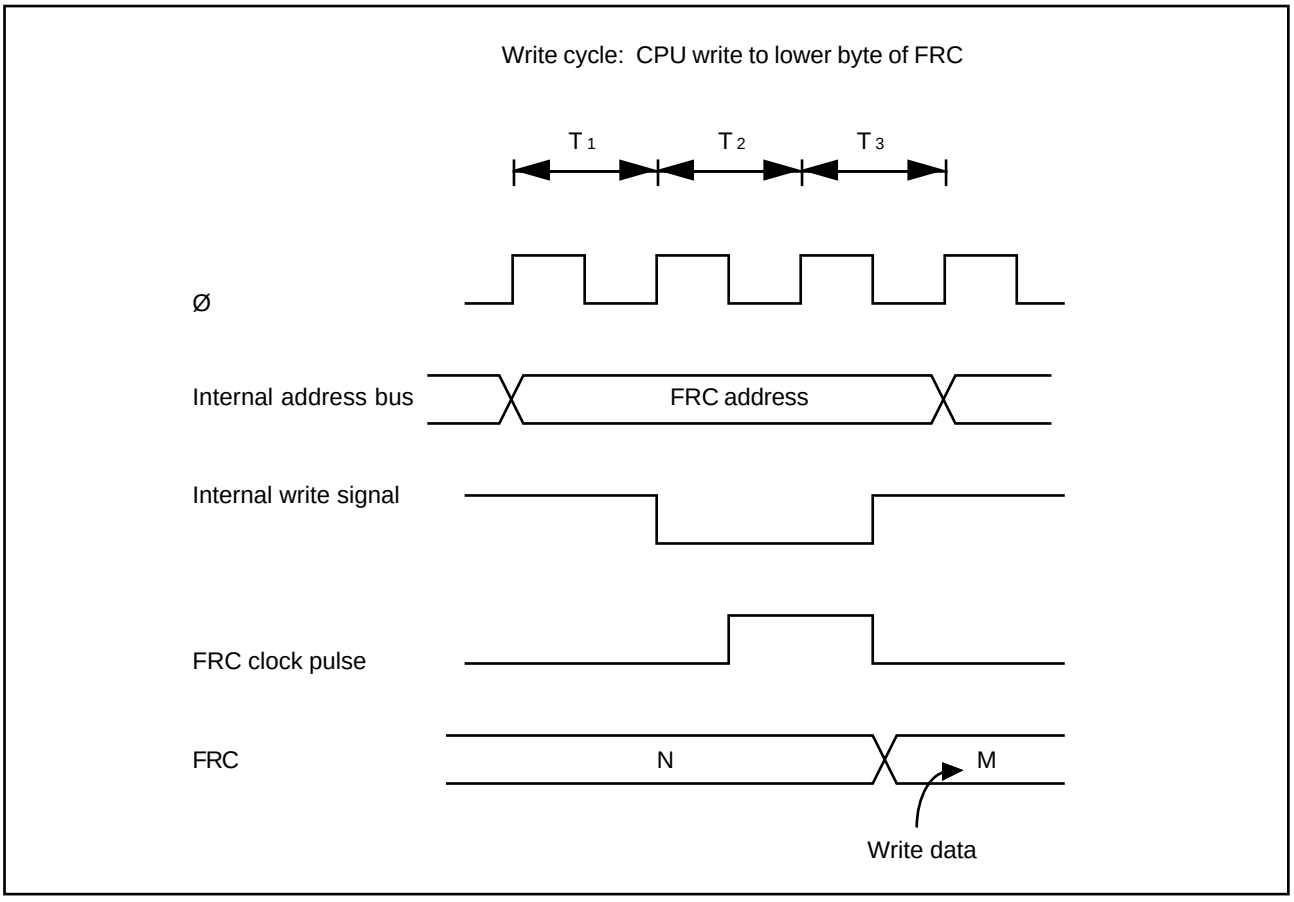

Figure 6-19. FRC Write-Increment Contention

(3) Contention between OCR Write and Compare-Match: If a compare-match occurs during the T3 state of a write cycle to the lower byte of OCRA or OCRB, the write takes priority and the compare-match signal is inhibited.

Figure 6-20 shows this type of contention.

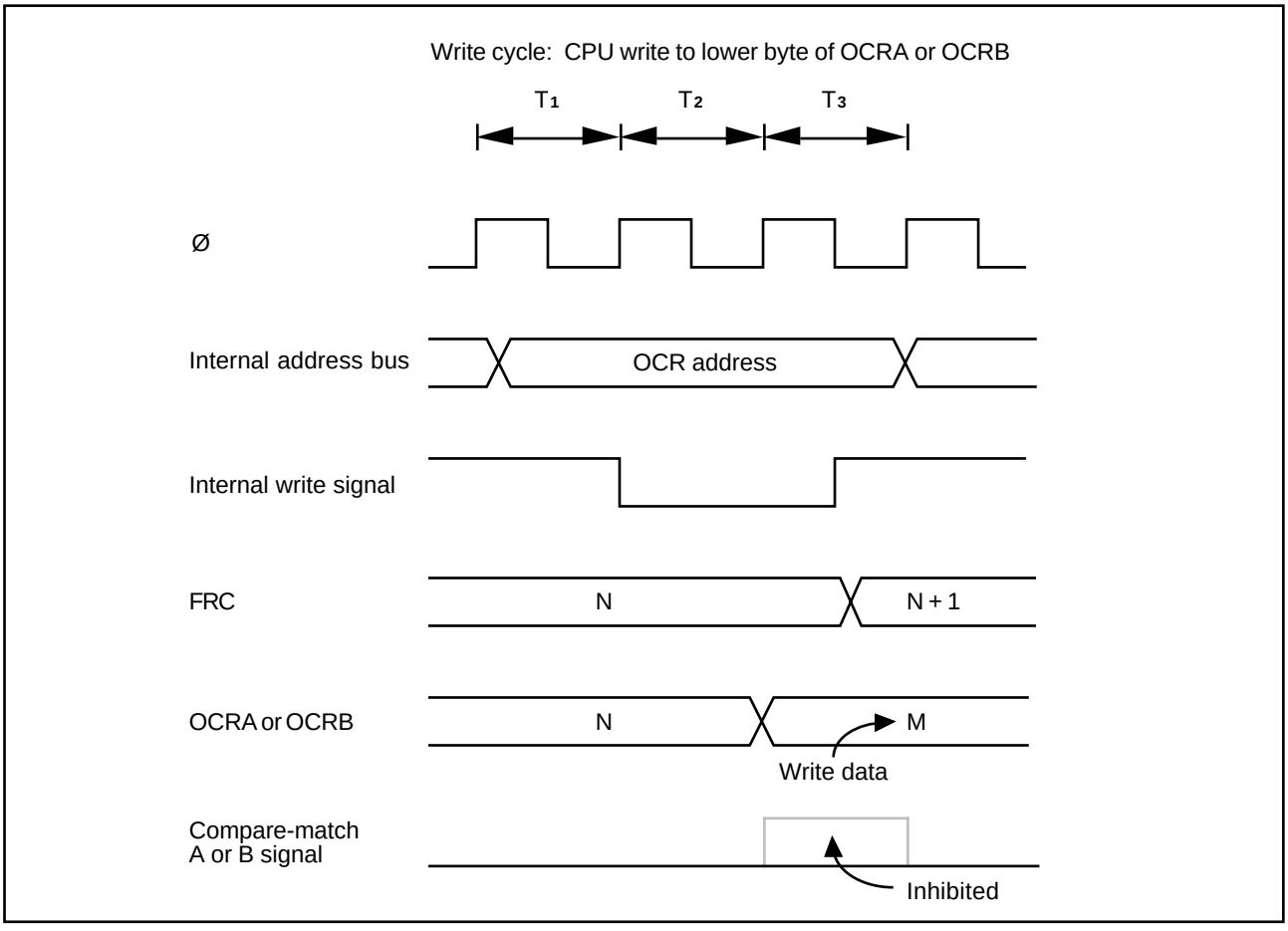

Figure 6-20. Contention between OCR Write and Compare-Match

(4) Incrementation Caused by Changing of Internal Clock Source: When an internal clock source is changed, the changeover may cause the FRC to increment. This depends on the time at which the clock select bits (CKS1 and CKS0) are rewritten, as shown in table 6-5.

The pulse that increments the FRC is generated at the falling edge of the internal clock source. If clock sources are changed when the old source is High and the new source is Low, as in case No. 3 in table 6-5, the changeover generates a falling edge that triggers the FRC increment clock pulse.

Switching between an internal and external clock source can also cause the FRC to increment.

Table 6-5. Effect of Changing Internal Clock Sources

No.	Description	Timing chart
1	Low → Low: CKS1 and CKS0 are rewritten while both clock sources are Low.	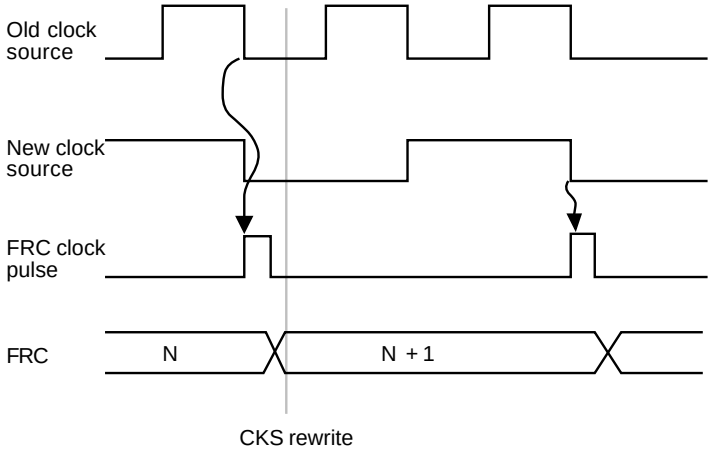
2	Low → High: CKS1 and CKS0 are rewritten while old clock source is Low and new clock source is High.	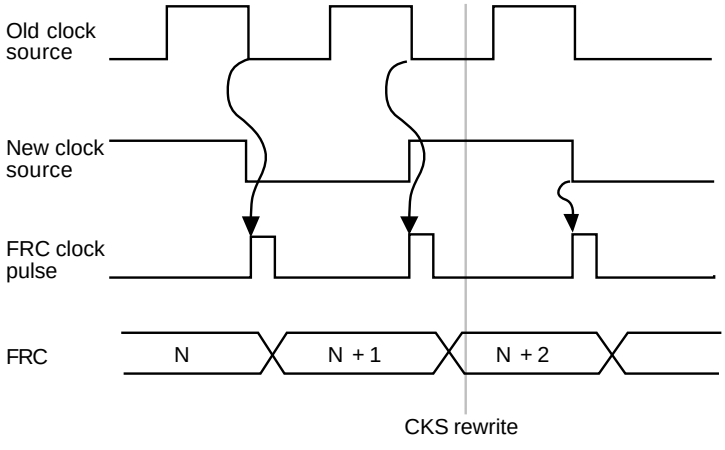

Table 6-5. Effect of Changing Internal Clock Sources (cont.)

No.	Description	Timing chart
3	High → Low: CKS1 and CKS0 are rewritten while old clock source is High and new clock source is Low.	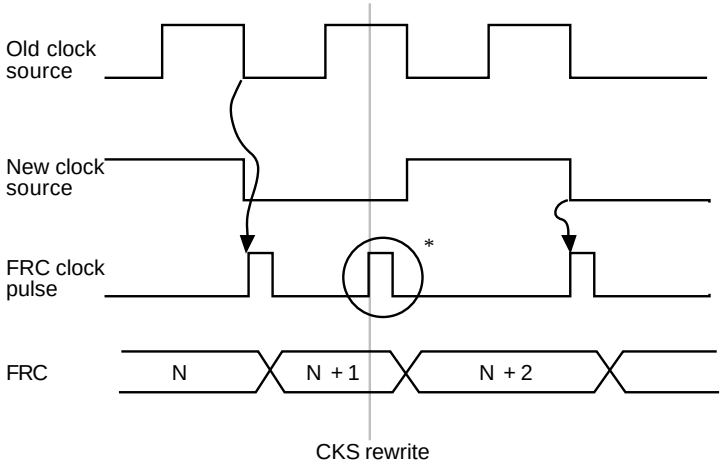
4	High → High: CKS1 and CKS0 are rewritten while both clock sources are High.	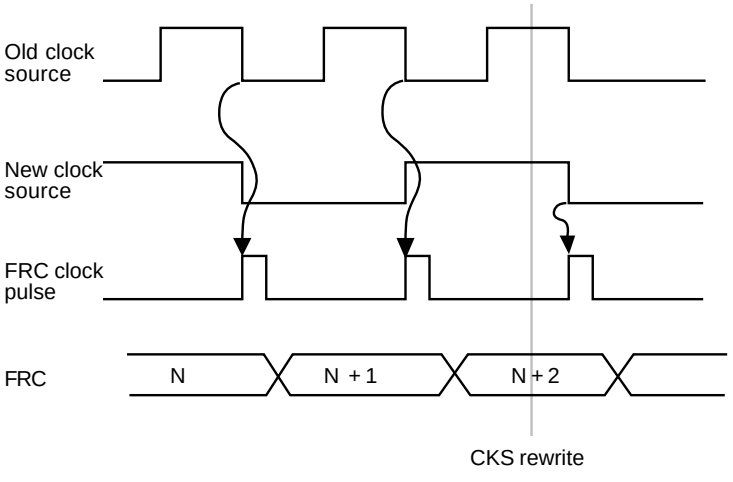

Note: * The switching of clock sources is regarded as a falling edge that increments the FRC.

Section 7. 8-Bit Timers

7.1 Overview

The H8/329 Series includes an 8-bit timer module with two channels (TMR0 and TMR1). Each channel has an 8-bit counter (TCNT) and two time constant registers (TCORA and TCORB) that are constantly compared with the TCNT value to detect compare-match events. One application of the 8-bit timer module is to generate a rectangular-wave output with an arbitrary duty cycle.

7.1.1 Features

The features of the 8-bit timer module are listed below.

- Selection of seven clock sources
  The counters can be driven by one of six internal clock signals or an external clock input (enabling use as an external event counter).
- Selection of three ways to clear the counters
  The counters can be cleared on compare-match A or B, or by an external reset signal.
- Timer output controlled by two time constants
  The timer output signal in each channel is controlled by two independent time constants, enabling the timer to generate output waveforms with an arbitrary duty factor.
- Three independent interrupts
  Compare-match A and B and overflow interrupts can be requested independently.

7.1.2 Block Diagram

Figure 7-1 shows a block diagram of one channel in the 8-bit timer module. The other channel is identical.

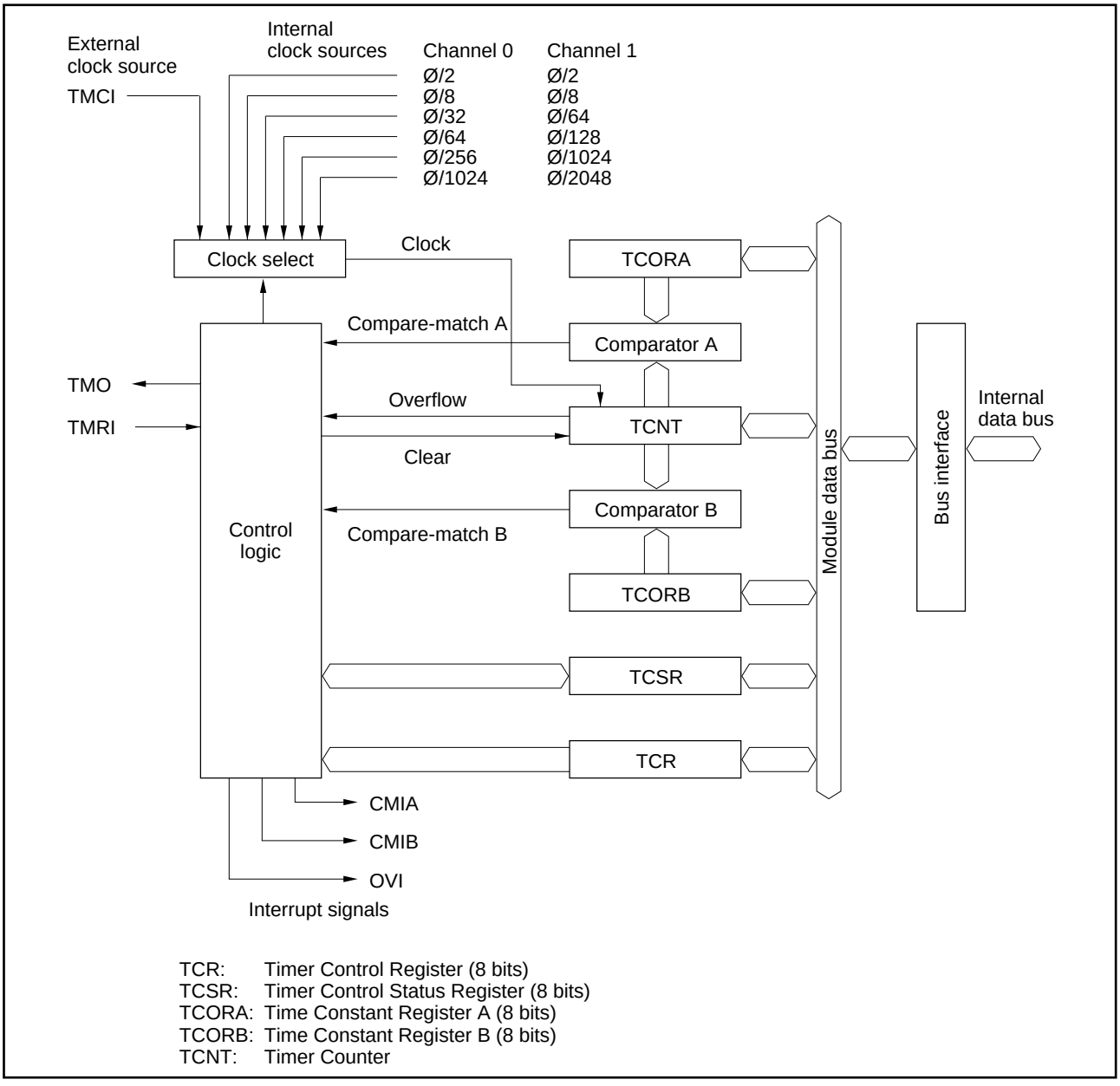

Figure 7-1. Block Diagram of 8-Bit Timer

7.1.3 Input and Output Pins

Table 7-1 lists the input and output pins of the 8-bit timer.

Table 7-1. Input and Output Pins of 8-Bit Timer

	Abbreviation			
Name	**TMR0**	**TMR1**	**I/O**	**Function**
Timer output	TMO_0	TMO_1	Output	Output controlled by compare-match
Timer clock input	$TMCI_0$	$TMCI_1$	Input	External clock source for the counter
Timer reset input	$TMRI_0$	$TMRI_1$	Input	External reset signal for the counter

7.1.4 Register Configuration

Table 7-2 lists the registers of the 8-bit timer module. Each channel has an independent set of registers.

Table 7-2. 8-Bit Timer Registers

				Address	
Name	**Abbreviation**	**R/W**	**Initial value**	**TMR0**	**TMR1**
Timer control register	TCR	R/W	H'00	H'FFC8	H'FFD0
Timer control/status register	TCSR	R/(W)*	H'10	H'FFC9	H'FFD1
Timer constant register A	TCORA	R/W	H'FF	H'FFCA	H'FFD2
Timer constant register B	TCORB	R/W	H'FF	H'FFCB	H'FFD3
Timer counter	TCNT	R/W	H'00	H'FFCC	H'FFD4
Serial/timer control register	STCR	R/W	H'F8	H'FFC3	H'FFC3

Note: * Software can write a “0” to clear bits 7 to 5, but cannot write a “1” in these bits.

7.2 Register Descriptions

7.2.1 Timer Counter (TCNT)—H'FFCC (TMR0), H'FFD4 (TMR1)

Bit	7	6	5	4	3	2	1	0
Initial value	0	0	0	0	0	0	0	0
Read/Write	R/W	R/W	R/W	R/W	R/W	R/W	R/W	R/W

Each timer counter (TCNT) is an 8-bit up-counter that increments on a pulse generated from an internal or external clock source selected by clock select bits 2 to 0 (CKS2 to CKS0) of the timer control register (TCR). The CPU can always read or write the timer counter.

The timer counter can be cleared by an external reset input or by an internal compare-match signal generated at a compare-match event. Clock clear bits 1 and 0 (CCLR1 and CCLR0) of the timer control register select the method of clearing.

When a timer counter overflows from H'FF to H'00, the overflow flag (OVF) in the timer control/status register (TCSR) is set to “1.”

The timer counters are initialized to H'00 at a reset and in the standby modes.

Bit	7	6	5	4	3	2	1	0
Initial value	1	1	1	1	1	1	1	1
Read/Write	R/W	R/W	R/W	R/W	R/W	R/W	R/W	R/W

Bit	7	6	5	4	3	2	1	0
	CMIEB	CMIEA	OVIE	CCLR1	CCLR0	CKS2	CKS1	CKS0
Initial value	0	0	0	0	0	0	0	0
Read/Write	R/W	R/W	R/W	R/W	R/W	R/W	R/W	R/W

Bit 7

CMIEB	Description	
0	Compare-match interrupt request B (CMIB) is disabled.	(Initial value)
1	Compare-match interrupt request B (CMIB) is enabled.	

7.2.2 Time Constant Registers A and B (TCORA and TCORB)—H'FFCA and H'FFCB (TMR0), H'FFD2 and H'FFD3 (TMR1)

TCORA and TCORB are 8-bit readable/writable registers. The timer count is continually

Bit 6

CMIEA	Description	
0	Compare-match interrupt request A (CMIA) is disabled.	(Initial value)
1	Compare-match interrupt request A (CMIA) is enabled.	

compared with the constants written in these registers. When a match is detected, the corresponding compare-match flag (CMFA or CMFB) is set in the timer control/status register (TCSR).

The timer output signal (TMO0 or TMO1) is controlled by these compare-match signals as

Bit 5

OVIE	Description	
0	The timer overflow interrupt request (OVI) is disabled.	(Initial value)
1	The timer overflow interrupt request (OVI) is enabled.	

specified by output select bits 3 to 0 (OS3 to OS0) in the timer control/status register (TCSR).

TCORA and TCORB are initialized to H'FF at a reset and in the standby modes.

Bit 4	Bit 3		
CCLR1	**CCLR0**	**Description**	
0	0	Not cleared.	(Initial value)
0	1	Cleared on compare-match A.	
1	0	Cleared on compare-match B.	
1	1	Cleared on rising edge of external reset input signal.	

Compare-match is not detected during the T_3 state of a write cycle to TCORA or TCORB. See item (3) in section 7.6, “Application Notes.”

7.2.3 Timer Control Register (TCR)—H'FFC8 (TMR0), H'FFD0 (TMR1)

Each TCR is an 8-bit readable/writable register that selects the clock source and the time at which

Bits 2, 1, and 0—Clock Select (CKS2, CKS1, and CKS0): These bits and bits ICKS1 and ICKS0 in the serial/timer control register (STCR) select the internal or external clock source for the timer counter. Six internal clock sources, derived by prescaling the system clock, are available for each timer channel. For internal clock sources the counter is incremented on the falling edge of the internal clock. For an external clock source, these bits can select whether to increment the counter on the rising or falling edge of the clock input, or on both edges.

	TCR			STCR		
	Bit 2	**Bit 1**	**Bit 0**	**Bit 1**	**Bit 0**	
Channel	**CKS2**	**CKS1**	**CKS0**	**ICKS1**	**ICKS0**	**Description**
0	0	0	0	—	—	No clock source (timer stopped) (Initial value)
	0	0	1	—	0	Ø/8 internal clock, counted on falling edge
	0	0	1	—	1	Ø/2 internal clock, counted on falling edge
	0	1	0	—	0	Ø/64 internal clock, counted on falling edge
	0	1	0	—	1	Ø/32 internal clock, counted on falling edge
	0	1	1	—	0	Ø/1024 internal clock, counted on falling edge
	0	1	1	—	1	Ø/256 internal clock, counted on falling edge
	1	0	0	—	—	No clock source (timer stopped)
	1	0	1	—	—	External clock source, counted on rising edge
	1	1	0	—	—	External clock source, counted on falling edge
	1	1	1	—	—	External clock source, counted on both rising and falling edges
1	0	0	0	—	—	No clock source (timer stopped) (Initial value)
	0	0	1	0	—	Ø/8 internal clock, counted on falling edge
	0	0	1	1	—	Ø/2 internal clock, counted on falling edge
	0	1	0	0	—	Ø/64 internal clock, counted on falling edge
	0	1	0	1	—	Ø/128 internal clock, counted on falling edge
	0	1	1	0	—	Ø/1024 internal clock, counted on falling edge
	0	1	1	1	—	Ø/2048 internal clock, counted on falling edge
	1	0	0	—	—	No clock source (timer stopped)
	1	0	1	—	—	External clock source, counted on rising edge
	1	1	0	—	—	External clock source, counted on falling edge
	1	1	1	—	—	External clock source, counted on both rising and falling edges

the timer counter is cleared, and enables interrupts.

Bit	7	6	5	4	3	2	1	0
	CMFB	CMFA	OVF	—	OS3	OS2	OS1	OS0
Initial value	0	0	0	1	0	0	0	0
Read/Write	R/(W)*	R/(W)*	R/(W)*	—	R/W	R/W	R/W	R/W

The TCRs are initialized to H'00 at a reset and in the standby modes.

For timing diagrams, see section 7.3, “Operation.”

Bit 7—Compare-match Interrupt Enable B (CMIEB): This bit selects whether to request compare-match interrupt B (CMIB) when compare-match flag B (CMFB) in the timer control/status register (TCSR) is set to “1.”

Bit 7

CMFB	Description	
0	To clear CMFB, the CPU must read CMFB after it has been set to “1,” then write a “0” in this bit.	(Initial value)
1	This bit is set to 1 when TCNT = TCORB.	

Bit 6

CMFA	Description	
0	To clear CMFA, the CPU must read CMFA after it has been set to “1,” then write a “0” in this bit.	(Initial value)
1	This bit is set to 1 when TCNT = TCORA.	

Bit 6—Compare-match Interrupt Enable A (CMIEA): This bit selects whether to request compare-match interrupt A (CMIA) when compare-match flag A (CMFA) in the timer control/status register (TCSR) is set to “1.”

Bit 5 OVF	Description	
0	To clear OVF, the CPU must read OVF after it has been set to “1,” then write a “0” in this bit.	(Initial value)
1	This bit is set to 1 when TCNT changes from H'FF to H'00.	

Bit 5—Timer Overflow Interrupt Enable (OVIE): This bit selects whether to request a timer overflow interrupt (OVI) when the overflow flag (OVF) in the timer control/status register (TCSR) is set to “1.”

Bits 4 and 3—Counter Clear 1 and 0 (CCLR1 and CCLR0): These bits select how the timer counter is cleared: by compare-match A or B or by an external reset input.

Bit 3 OS3	Bit 2 OS2	Description	
0	0	No change when compare-match B occurs.	(Initial value)
0	1	Output changes to “0” when compare-match B occurs.	
1	0	Output changes to “1” when compare-match B occurs.	
1	1	Output inverts (toggles) when compare-match B occurs.	

Bit 1 OS1	Bit 0 OS0	Description	
0	0	No change when compare-match A occurs.	(Initial value)
0	1	Output changes to “0” when compare-match A occurs.	
1	0	Output changes to “1” when compare-match A occurs.	
1	1	Output inverts (toggles) when compare-match A occurs.	

7.2.5 Serial/Timer Control Register (STCR)—H'FFC3

Bit	7	6	5	4	3	2	1	0
	—	—	—	—	—	MPE	ICKS1	ICKS0
Initial value	1	1	1	1	1	0	0	0
Read/Write	—	—	—	—	—	R/W	R/W	R/W

The STCR is an 8-bit readable/writable register that controls the serial communication interface and selects internal clock sources for the timer counters.

The STCR is initialized to H'F8 at a reset.

Bits 7 to 3—Reserved: These bits cannot be modified and are always read as “1.”

Bit 2—Multiprocessor Enable (MPE): Controls the operating mode of the serial communication interface. For details, see section 8, “Serial Communication Interface.”

Bits 1 and 0—Internal Clock Source Select 1 and 0 (ICKS1 and ICKS0): These bits and bits CKS2 to CKS0 in the TCR select clock sources for the timer counters. For details, see section 7.2.3, “Timer Control Register.”

7.2.4 Timer Control/Status Register (TCSR)—H'FFC9 (TMR0), H'FFD1 (TMR1)

Note: * Software can write a “0” in bits 7 to 5 to clear the flags, but cannot write a “1” in these bits.

The TCSR is an 8-bit readable and partially writable register that indicates compare-match and overflow status and selects the effect of compare-match events on the timer output signal.

The TCSR is initialized to H'10 at a reset and in the standby modes.

Bit 7—Compare-Match Flag B (CMFB): This status flag is set to “1” when the timer count

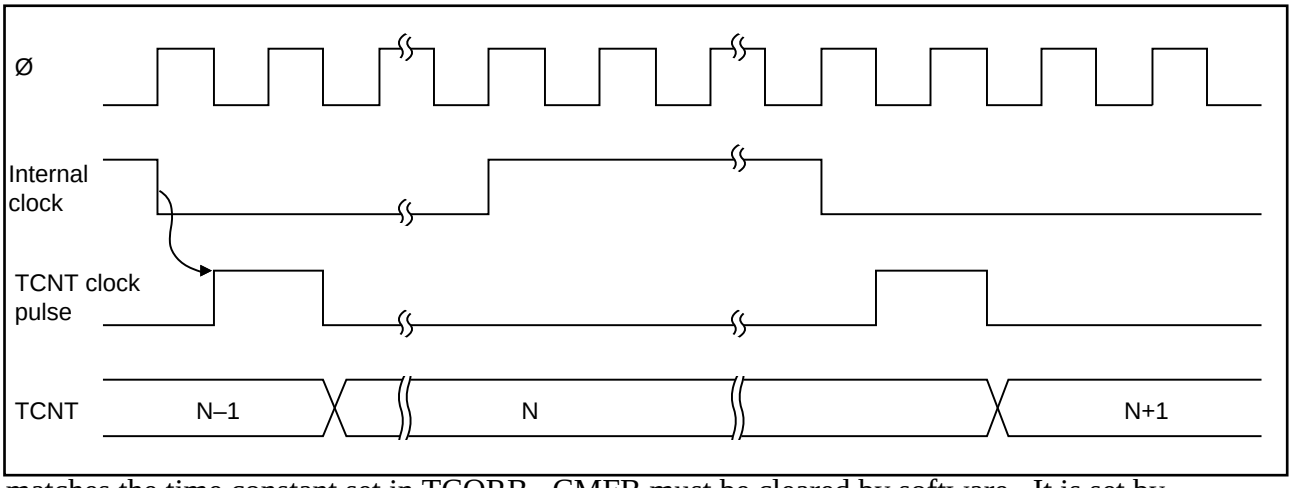

matches the time constant set in TCORB. CMFB must be cleared by software. It is set by hardware, however, and cannot be set by software.

Bit 6—Compare-Match Flag A (CMFA): This status flag is set to “1” when the timer count matches the time constant set in TCORA. CMFA must be cleared by software. It is set by hardware, however, and cannot be set by software.

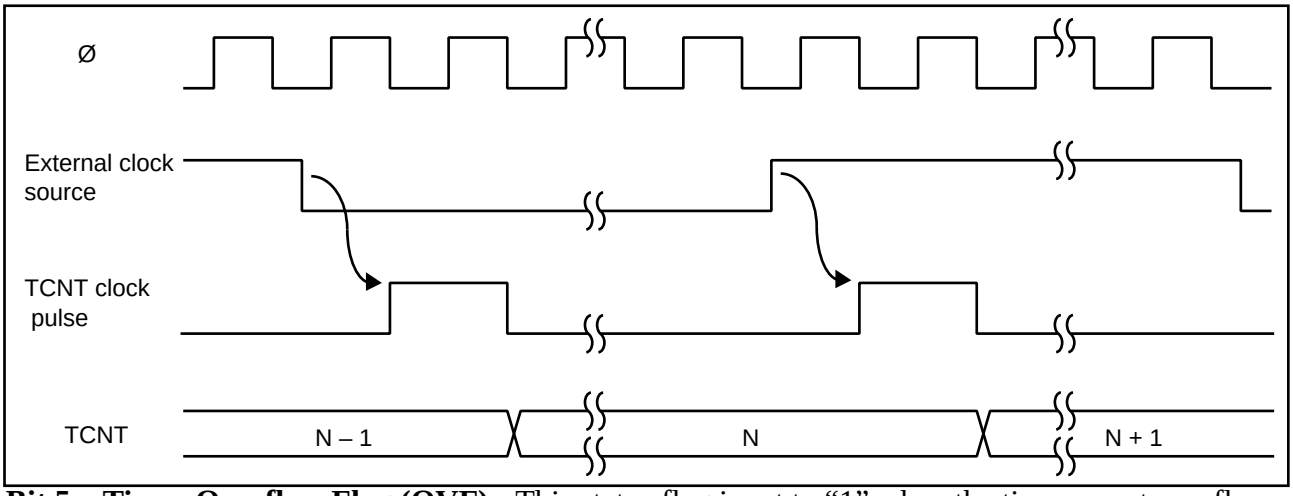

Bit 5—Timer Overflow Flag (OVF): This status flag is set to “1” when the timer count overflows (changes from H'FF to H'00). OVF must be cleared by software. It is set by hardware, however,

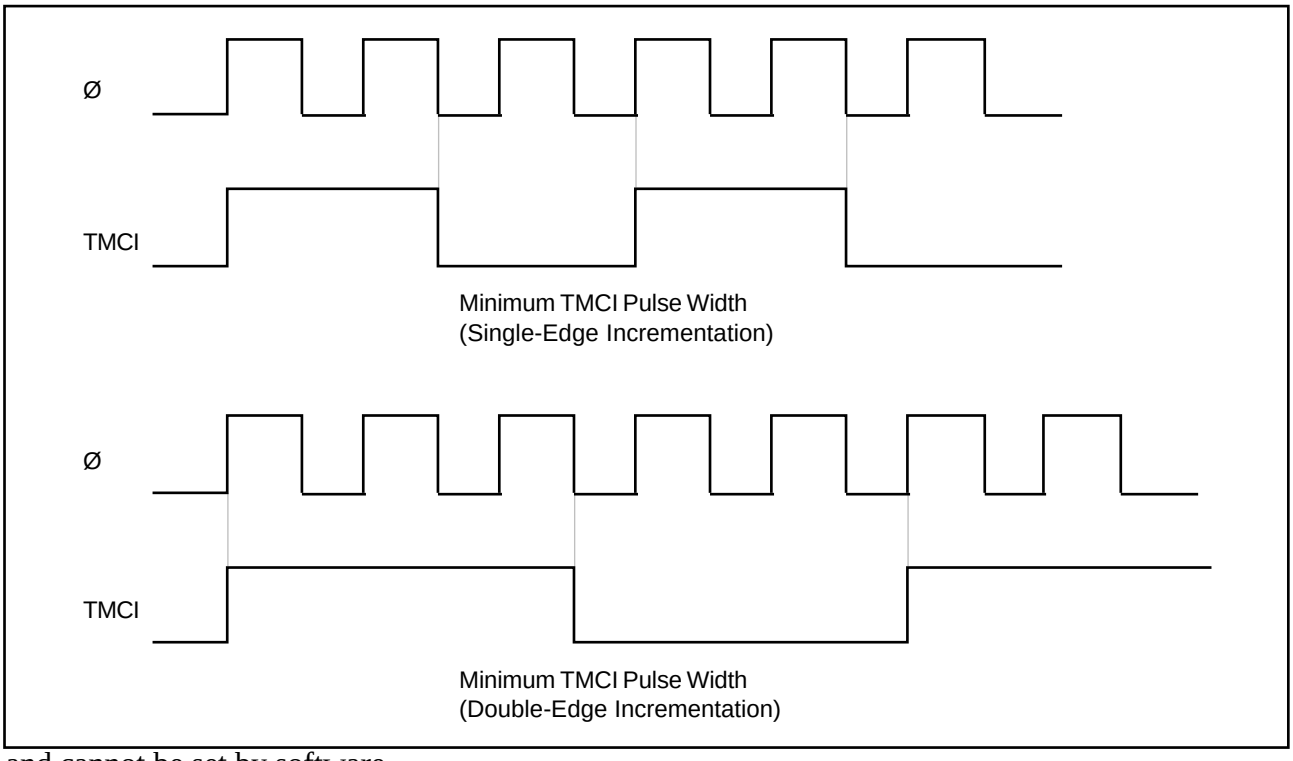

and cannot be set by software.

Bit 4—Reserved: This bit cannot be modified and is always read as “1.”

Bits 3 to 0—Output Select 3 to 0 (OS3 to OS0): These bits specify the effect of compare-match events on the timer output signal (TCOR or TCNT). Bits OS3 and OS2 control the effect of compare-match B on the output level. Bits OS1 and OS0 control the effect of compare-match A on the output level.

If compare-match A and B occur simultaneously, any conflict is resolved as explained in item (4) in section 7.6, “Application Notes.”

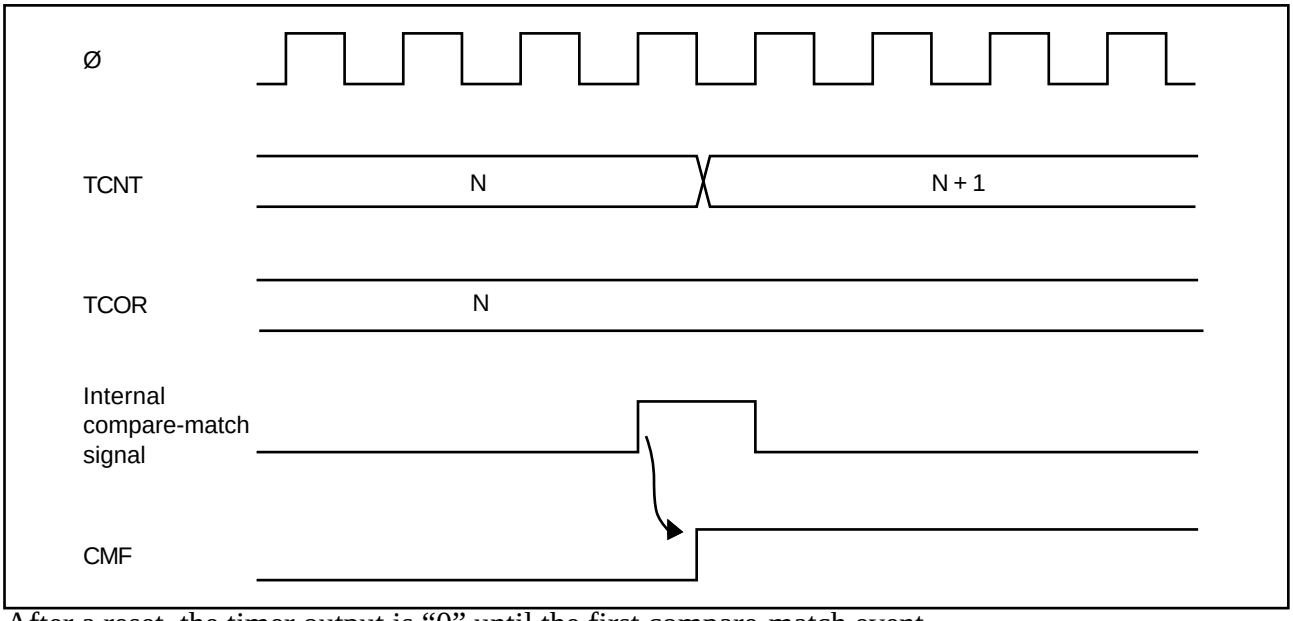

After a reset, the timer output is “0” until the first compare-match event.

When all four output select bits are cleared to “0” the timer output signal is disabled.

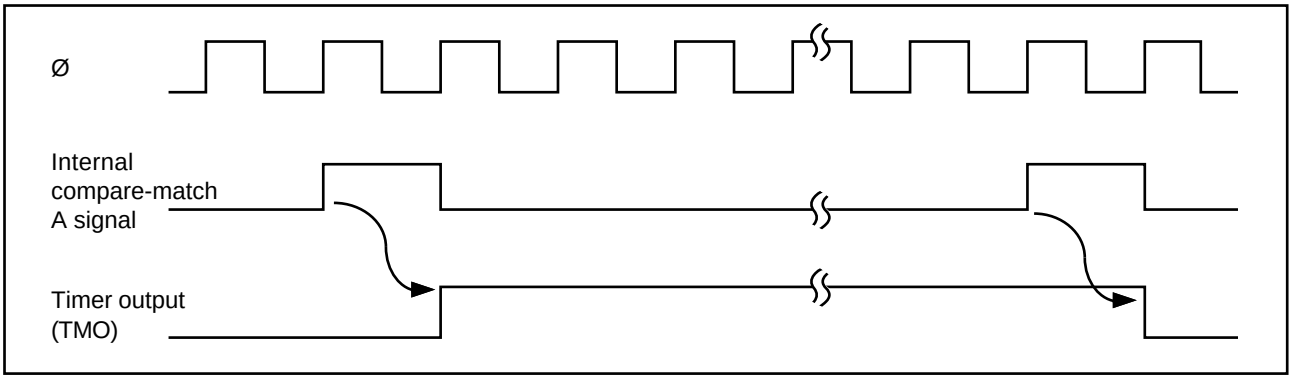

7.3 Operation

7.3.1 TCNT Incrementation Timing

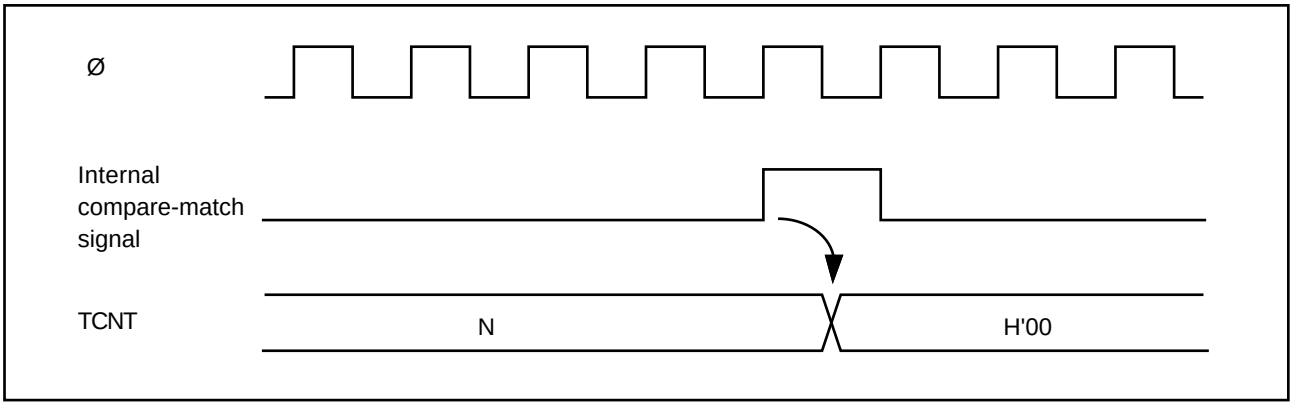

The timer counter increments on a pulse generated once for each period of the selected (internal or external) clock source.

Internal Clock: Internal clock sources are created from the system clock by a prescaler. The counter increments on an internal TCNT clock pulse generated from the falling edge of the prescaler output, as shown in figure 7-2. Bits CKS2 to CKS0 of the TCR and bits ICKS1 and ICKS0 of the STCR can select one of the six internal clocks.

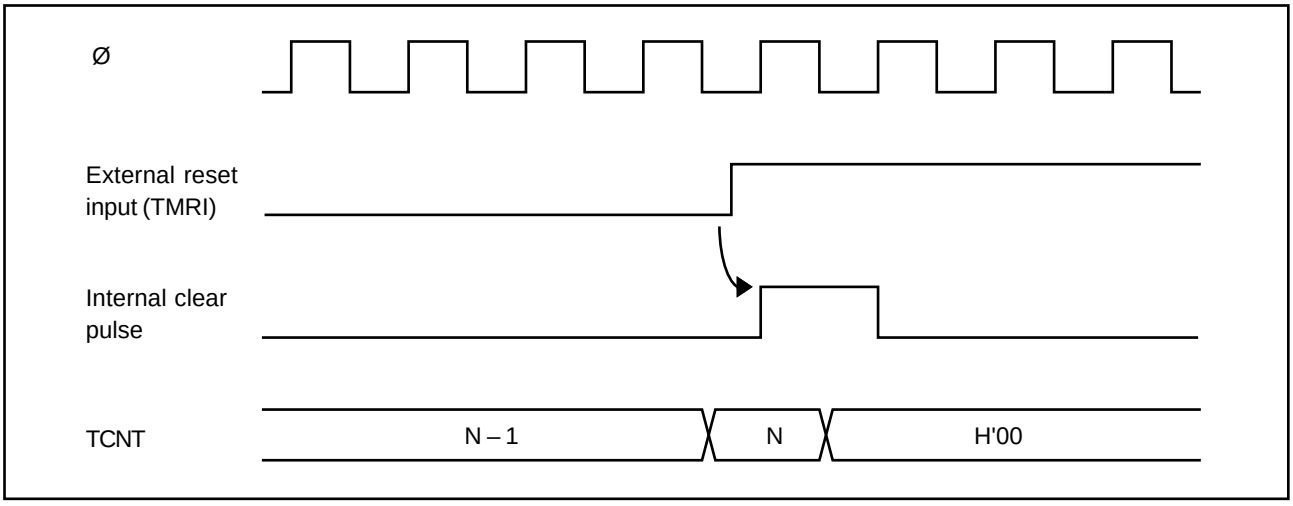

Figure 7-2. Count Timing for Internal Clock Input

External Clock: If external clock input (TMCI) is selected, the timer counter can increment on the rising edge, the falling edge, or both edges of the external clock signal. Figure 7-3 shows incrementation on both edges of the external clock signal.

The external clock pulse width must be at least 1.5 system clock periods for incrementation on a

single edge, and at least 2.5 system clock periods for incrementation on both edges. See figure 7-4. The counter will not increment correctly if the pulse width is shorter than these values.

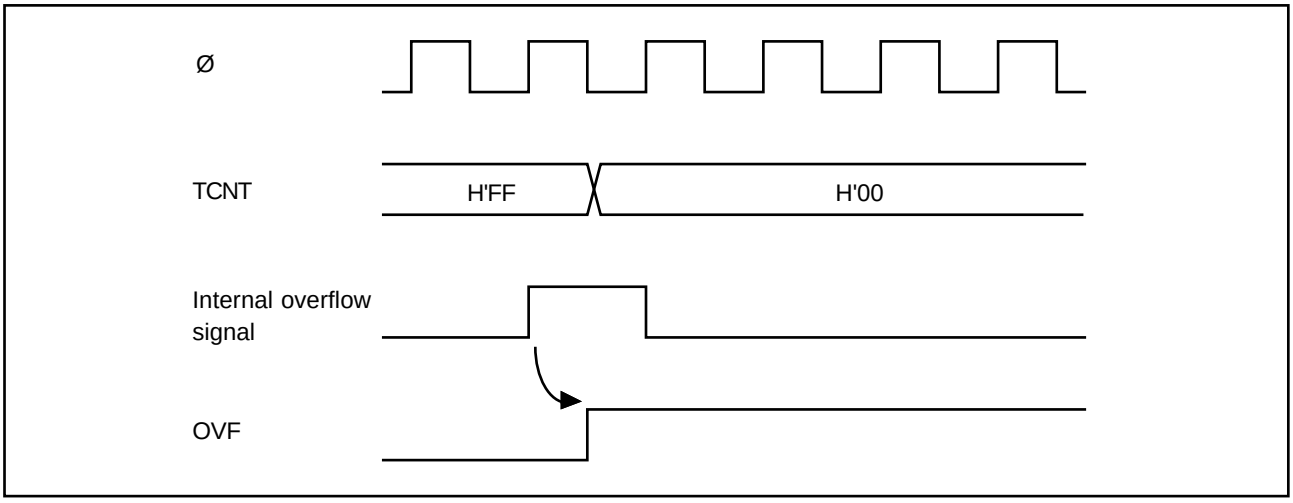

Figure 7-3. Count Timing for External Clock Input

Figure 7-4. Minimum External Clock Pulse Widths (Example)

7.3.2 Compare Match Timing

(1) Setting of Compare-Match Flags A and B (CMFA and CMFB): The compare-match flags are set to “1” by an internal compare-match signal generated when the timer count matches the time constant in TCNT or TCOR. The compare-match signal is generated at the last state in which the match is true, just before the timer counter increments to a new value.

Interrupt	Description	Priority
CMIA	Requested when CMFA and CMIEA are set	High
CMIB	Requested when CMFB and CMIEB are set	↑
OVI	Requested when OVF and OVIE are set	Low

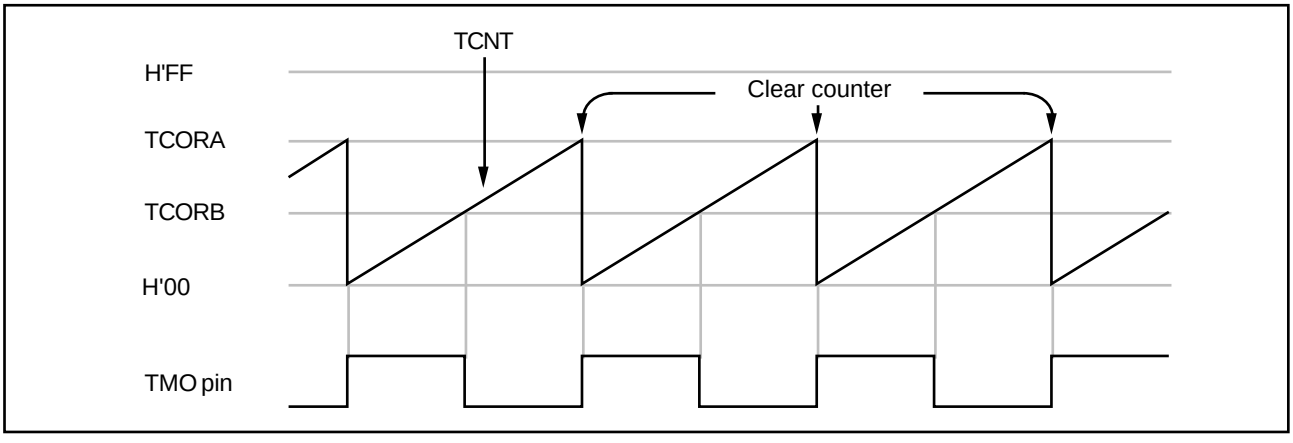

Accordingly, when the timer count matches one of the time constants, the compare-match signal is not generated until the next period of the clock source. Figure 7-5 shows the timing of the setting of the compare-match flags.

Figure 7-5. Setting of Compare-Match Flags

(2) Output Timing: When a compare-match event occurs, the timer output (TMO0 or TMO1) changes as specified by the output select bits (OS3 to OS0) in the TCSR. Depending on these bits, the output can remain the same, change to “0,” change to “1,” or toggle.

Figure 7-6 shows the timing when the output is set to toggle on compare-match A.

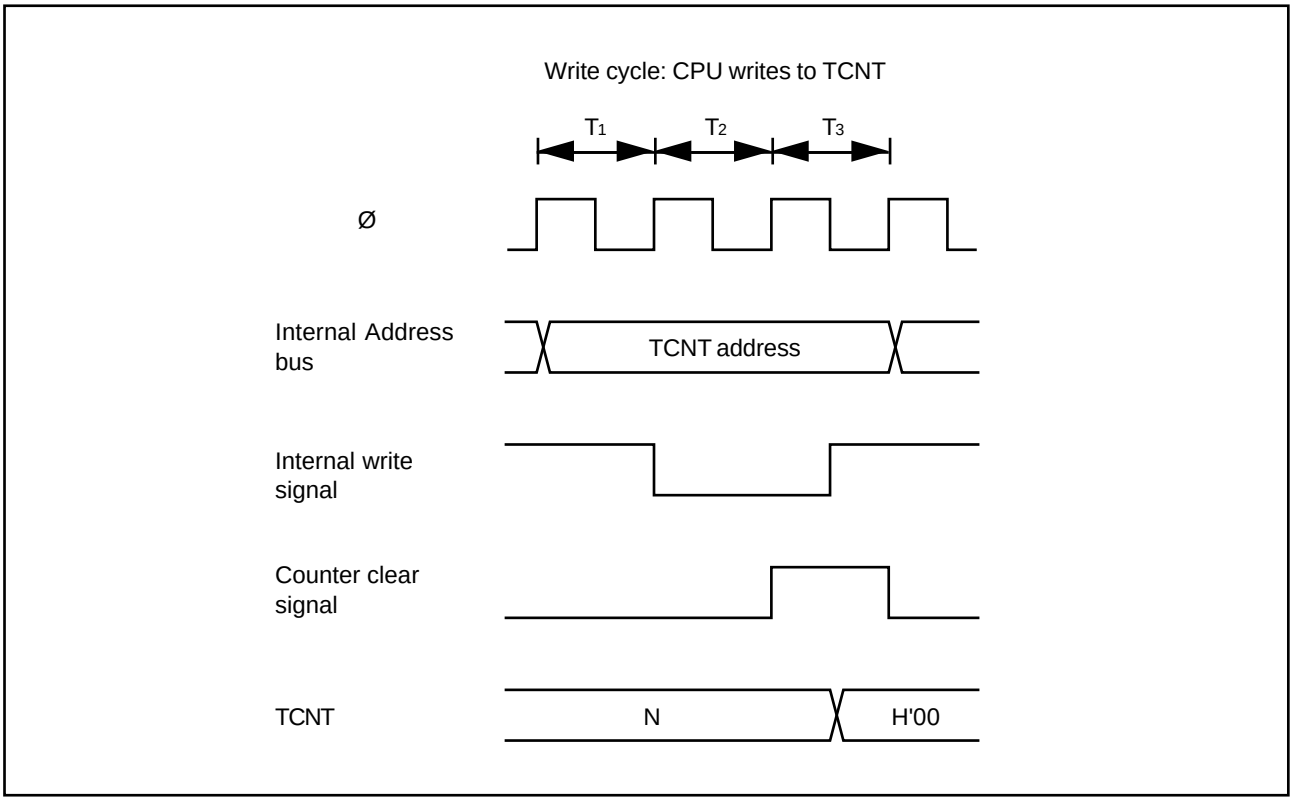

Figure 7-6. Timing of Timer Output

(3) Timing of Compare-Match Clear: Depending on the CCLR1 and CCLR0 bits in the TCR, the timer counter can be cleared when compare-match A or B occurs. Figure 7-7 shows the timing of this operation.

Figure 7-7. Timing of Compare-Match Clear

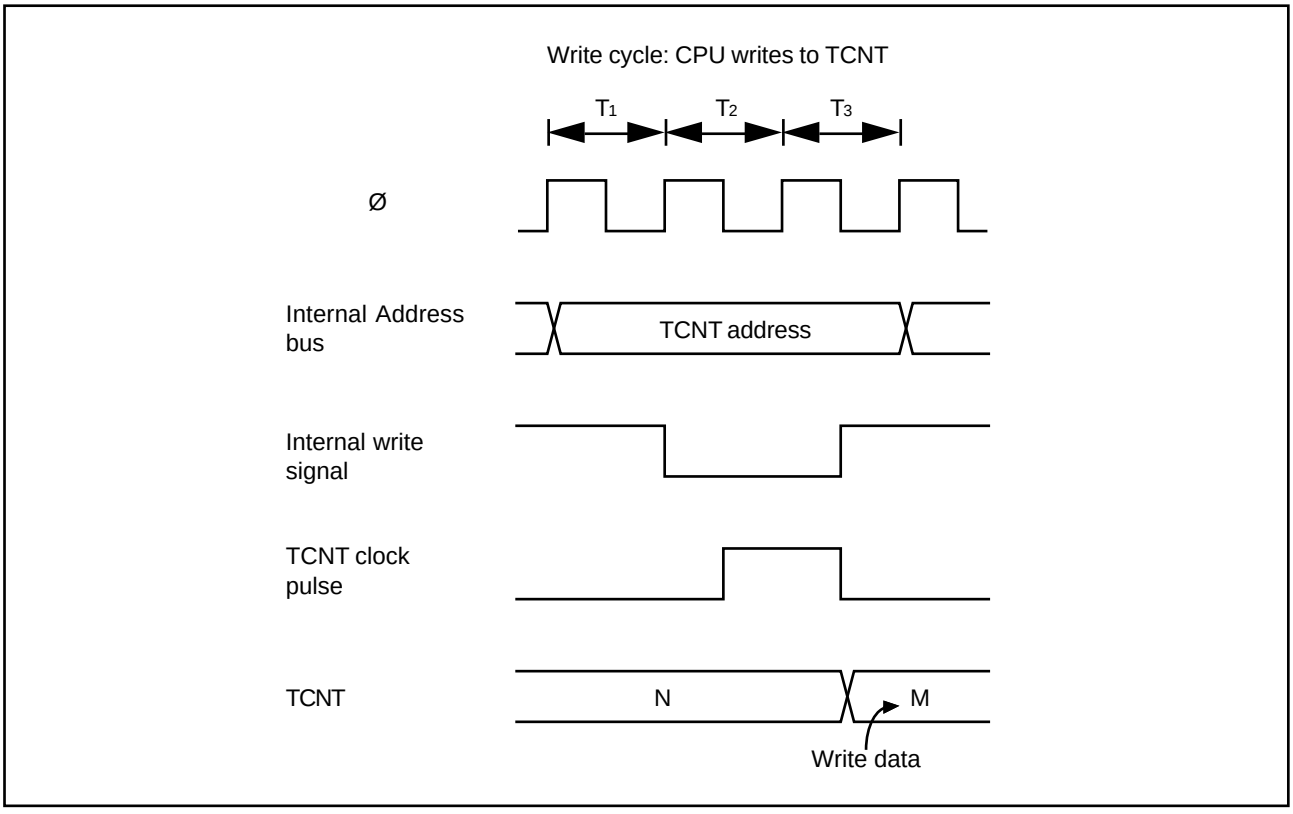

7.3.3 External Reset of TCNT

When the CCLR1 and CCLR0 bits in the TCR are both set to “1,” the timer counter is cleared on the rising edge of an external reset input. Figure 7-8 shows the timing of this operation. The timer reset pulse width must be at least 1.5 system clock periods.

Figure 7-8. Timing of External Reset

7.3.4 Setting of TCSR Overflow Flag (OVF)

The overflow flag (OVF) is set to “1” when the timer count overflows (changes from H'FF to H'00). Figure 7-9 shows the timing of this operation.

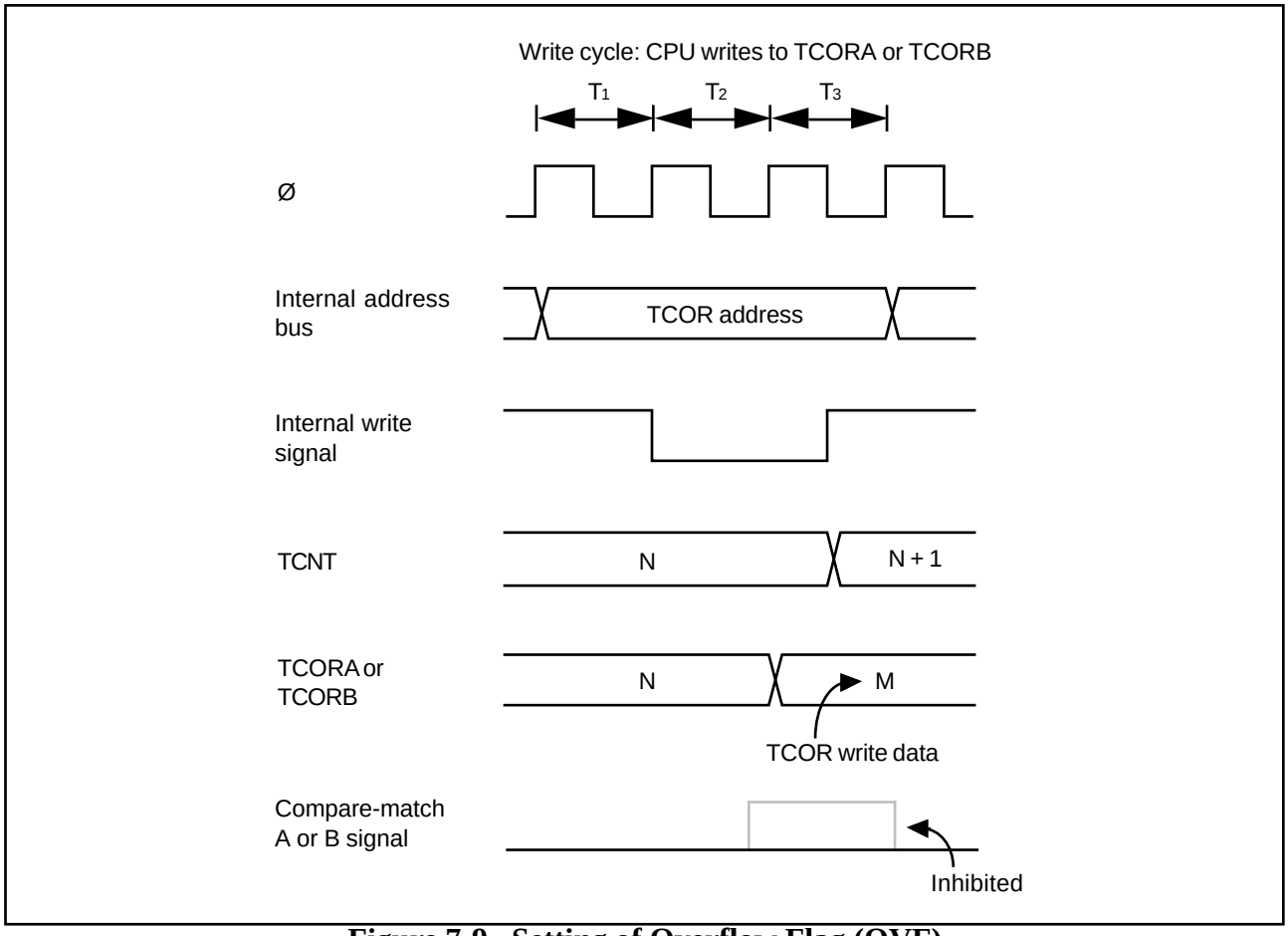

Figure 7-9. Setting of Overflow Flag (OVF)

Output selection	Priority
Toggle	High
“1” Output	↑
“0” Output	
No change	Low

7.4 Interrupts

Each channel in the 8-bit timer can generate three types of interrupts: compare-match A and B (CMIA and CMIB), and overflow (OVI). Each interrupt is requested when the corresponding enable bits are set in the TCR and TCSR. Independent signals are sent to the interrupt controller for each interrupt. Table 7-3 lists information about these interrupts.

Table 7-3. 8-Bit Timer Interrupts

7.5 Sample Application

In the example below, the 8-bit timer is used to generate a pulse output with a selected duty cycle.

No.	Description	Timing chart
1	Low → Low*1: Clock select bits are rewritten while both clock sources are Low.	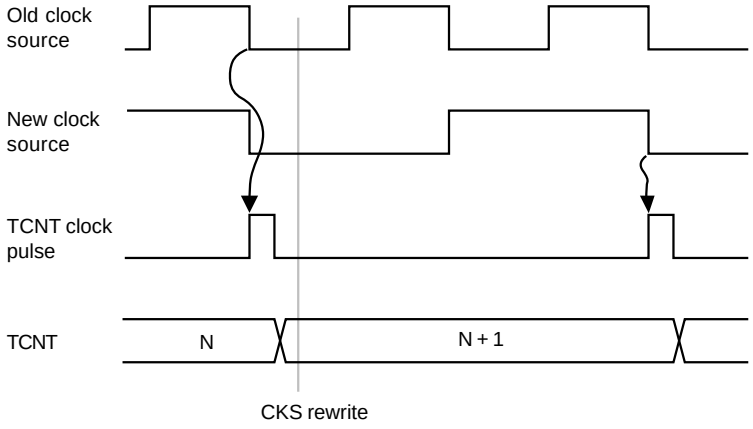
2	Low → High*2: Clock select bits are rewritten while old clock source is Low and new clock source is High.	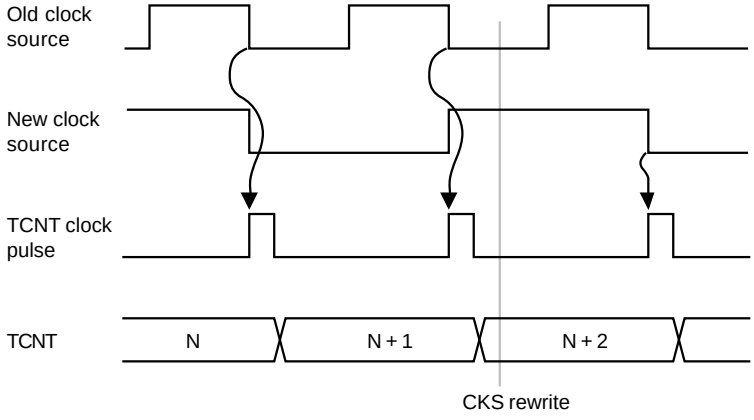

The control bits are set as follows:

(1) In the TCR, CCLR1 is cleared to “0” and CCLR0 is set to “1” so that the timer counter is cleared when its value matches the constant in TCORA.

(2) In the TCSR, bits OS3 to OS0 are set to “0110,” causing the output to change to “1” on

No.	Description	Timing chart
3	High → Low*1: Clock select bits are rewritten while old clock source is High and new clock source is Low.	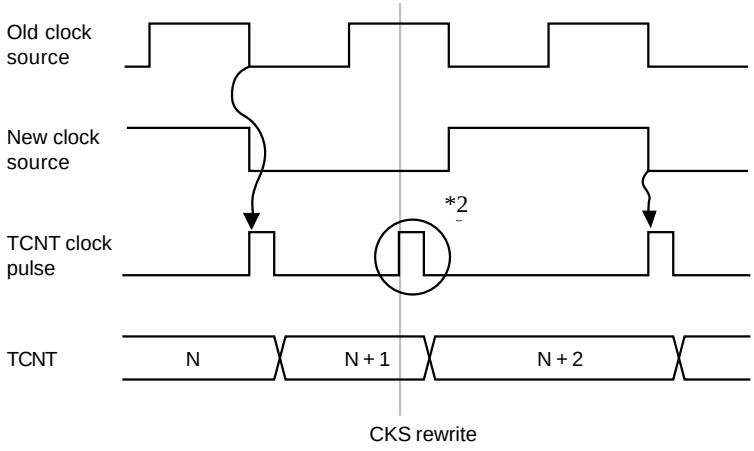
4	High → High: Clock select bits are rewritten while both clock sources are High.	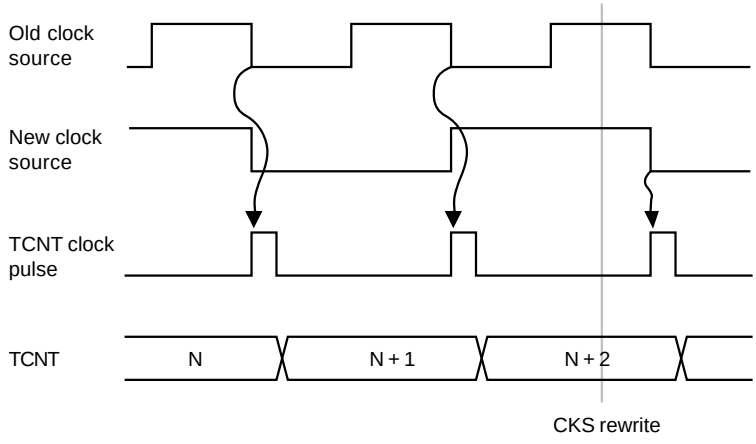

compare-match A and to “0” on compare-match B.

With these settings, the 8-bit timer provides output of pulses at a rate determined by TCORA with a pulse width determined by TCORB. No software intervention is required.

Figure 7-10. Example of Pulse Output

7.6 Application Notes

Application programmers should note that the following types of contention can occur in the 8-bit timer.

(1) Contention between TCNT Write and Clear: If an internal counter clear signal is generated during the T_3 state of a write cycle to the timer counter, the clear signal takes priority and the write is not performed.

Figure 7-11 shows this type of contention.

Section 8. Serial Communication Interface

8.1 Overview

The H8/329 Series includes a serial communication interface (SCI) for transferring serial data to and from other chips. Either synchronous or asynchronous communication can be selected.

8.1.1 Features

The features of the on-chip serial communication interface are:

- Asynchronous mode
  The H8/329 Series can communicate with a UART (Universal Asynchronous Receiver/Transmitter), ACIA (Asynchronous Communication Interface Adapter), or other chip that employs standard asynchronous serial communication. It also has a multiprocessor communication function for communication with other processors. Twelve data formats are available.
  — Data length: 7 or 8 bits
  — Stop bit length: 1 or 2 bits
  — Parity: Even, odd, or none
  — Multiprocessor bit: “1” or “0”
  — Error detection: Parity, overrun, and framing errors
  — Break detection: When a framing error occurs, the break condition can be detected by reading the level of the RxD line directly.
- Synchronous mode
  The SCI can communicate with chips able to perform clocked synchronous data transfer.
  — Data length: 8 bits
  — Error detection: Overrun errors
- Full duplex communication
  The transmitting and receiving sections are independent, so each channel can transmit and receive simultaneously. Both the transmit and receive sections use double buffering, so continuous data transfer is possible in either direction.
- Built-in baud rate generator
  Any specified baud rate can be generated.
- Internal or external clock source
  The SCI can operate on an internal clock signal from baud rate generator, or an external clock signal input at the SCK pin.
- Four interrupts
  TDR-empty, TSR-empty, receive-end, and receive-error interrupts are requested independently.

8.1.2 Block Diagram

Figure 8-1 shows a block diagram of the serial communication interface.

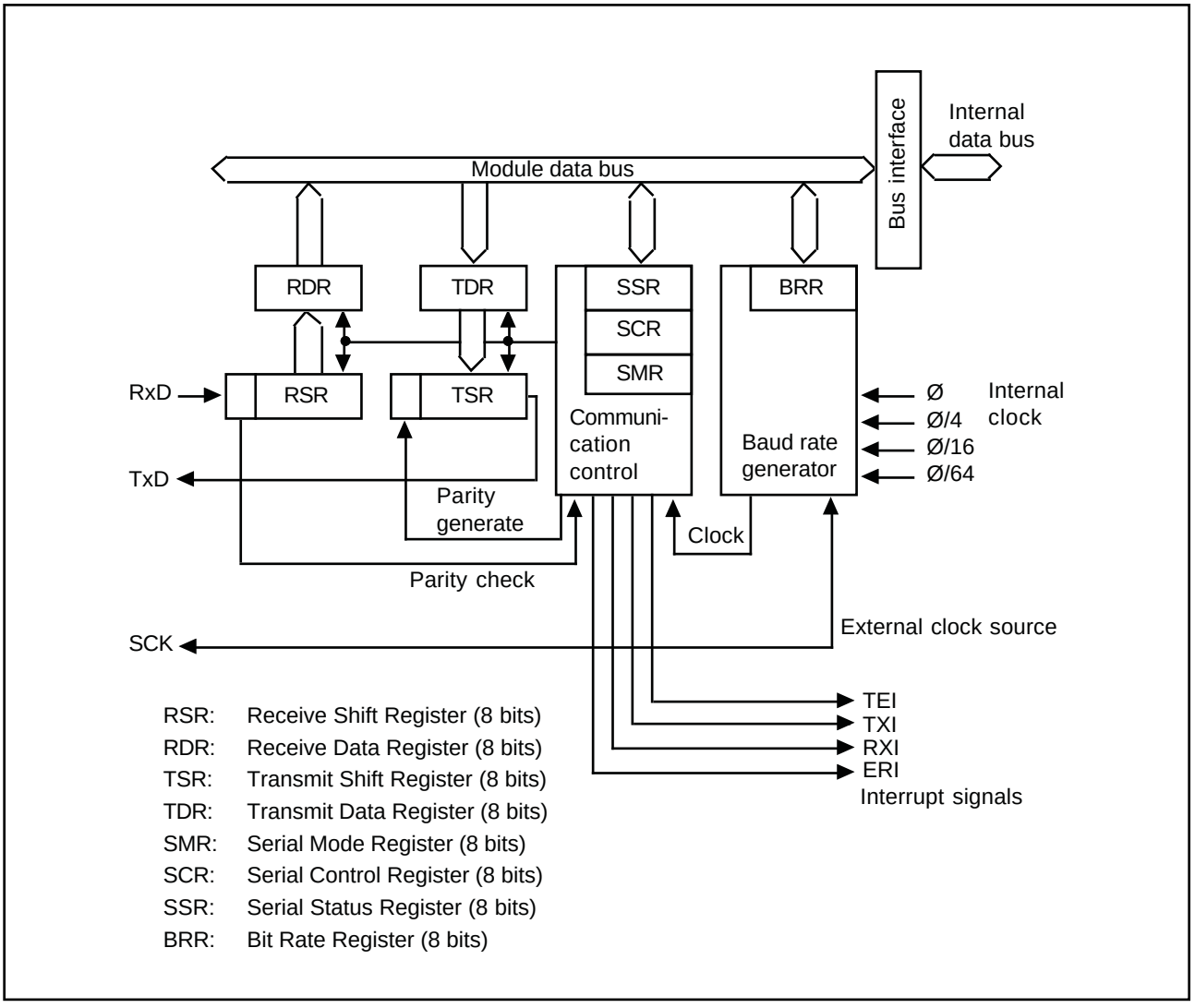

Figure 8-1. Block Diagram of Serial Communication Interface

8.1.3 Input and Output Pins

Table 8-1 lists the input and output pins used by the SCI module.

Table 8-1. SCI Input/Output Pins

Name	Abbr.	I/O	Function
Serial clock	SCK	Input/output	Serial clock input and output.
Receive data	RxD	Input	Receive data input.
Transmit data	TxD	Output	Transmit data output.

8.1.4 Register Configuration

Table 8-2 lists the SCI registers. These registers specify the operating mode (synchronous or asynchronous), data format and bit rate, and control the transmit and receive sections.

Table 8-2. SCI Registers

Name	Abbr.	R/W	Value	Address
Receive shift register	RSR	—	—	—
Receive data register	RDR	R	H'00	H'FFDD
Transmit shift register	TSR	—	—	—
Transmit data register	TDR	R/W	H'FF	H'FFDB
Serial mode register	SMR	R/W	H'00	H'FFD8
Serial control register	SCR	R/W	H'00	H'FFDA
Serial status register	SSR	R/(W)*	H'84	H'FFDC
Bit rate register	BRR	R/W	H'FF	H'FFD9
Serial/timer control register	STCR	R/W	H'F8	H'FFC3

Note: * Software can write a “0” to clear the flags in bits 7 to 3, but cannot write “1” in these bits.

8.2 Register Descriptions

8.2.1 Receive Shift Register (RSR)

Bit	7	6	5	4	3	2	1	0
Read/Write	—	—	—	—	—	—	—	—

The RSR receives incoming data bits. When one data character has been received, it is transferred to the receive data register (RDR).

The CPU cannot read or write the RSR directly.

8.2.2 Receive Data Register (RDR)—H'FFDD

Bit	7	6	5	4	3	2	1	0
Initial value	0	0	0	0	0	0	0	0
Read/Write	R	R	R	R	R	R	R	R

The RDR stores received data. As each character is received, it is transferred from the RSR to the RDR, enabling the RSR to receive the next character. This double-buffering allows the SCI to receive data continuously.

The CPU can read but not write the RDR. The RDR is initialized to H'00 at a reset and in the standby modes.

8.2.3 Transmit Shift Register (TSR)

Bit	7	6	5	4	3	2	1	0
Read/Write	—	—	—	—	—	—	—	—

The TSR holds the character currently being transmitted. When transmission of this character is completed, the next character is moved from the transmit data register (TDR) to the TSR and transmission of that character begins. If the TDRE bit is still set to “1,” however, nothing is transferred to the TSR.

The CPU cannot read or write the TSR directly.

8.2.4 Transmit Data Register (TDR)—H'FFDB

Bit	7	6	5	4	3	2	1	0
Initial value	1	1	1	1	1	1	1	1
Read/Write	R/W	R/W	R/W	R/W	R/W	R/W	R/W	R/W

The TDR is an 8-bit readable/writable register that holds the next character to be transmitted. When the TSR becomes empty, the character written in the TDR is transferred to the TSR. Continuous data transmission is possible by writing the next byte in the TDR while the current byte is being transmitted from the TSR.

The TDR is initialized to H'FF at a reset and in the standby modes.

8.2.5 Serial Mode Register (SMR)—H'FFD8

Bit	7	6	5	4	3	2	1	0
	C/$\overline{A}$	CHR	PE	O/$\overline{E}$	STOP	MP	CKS1	CKS0
Initial value	0	0	0	0	0	0	0	0
Read/Write	R/W	R/W	R/W	R/W	R/W	R/W	R/W	R/W

The SMR is an 8-bit readable/writable register that controls the communication format and selects the clock rate for the internal clock source. It is initialized to H'00 at a reset and in the standby modes. For further information on the SMR settings and communication formats, see tables 8-5 and 8-7 in section 8.3, “Operation.”

Bit 7—Communication Mode (C/$\overline{A}$): This bit selects the asynchronous or clocked synchronous communication mode.

Bit 7

C/$\overline{A}$	**Description**	
0	Asynchronous communication.	(Initial value)
1	Clocked synchronous communication.	

Bit 6—Character Length (CHR): This bit selects the character length in asynchronous mode. It is ignored in synchronous mode. The character length is always eight bits in synchronous mode.

Bit 6

CHR	**Description**	
0	8 bits per character.	(Initial value)
1	7 bits per character. (Bits 0 to 6 in TDR and RDR are sent and received.)	

Bit 5—Parity Enable (PE): This bit selects whether to add a parity bit in asynchronous mode. It is ignored in synchronous mode, and when a multiprocessor format is used.

Bit 5

PE	**Description**	
0	Transmit: No parity bit is added. Receive: Parity is not checked.	(Initial value)
1	Transmit: A parity bit is added. Receive: Parity is checked.	

Bit 4—Parity Mode (O/$\overline{\text{E}}$): In asynchronous mode, when parity is enabled (PE = “1”), this bit selects even or odd parity.

Even parity means that a parity bit is added to the data bits for each character to make the total number of 1’s even. Odd parity means that the total number of 1’s is made odd.

This bit is ignored when PE = “0,” or when a multiprocessor format is used. It is also ignored in the synchronous mode.

Bit 4

O/$\overline{\text{E}}$	**Description**	
0	Even parity.	(Initial value)
1	Odd parity.	

Bit 3—Stop Bit Length (STOP): This bit selects the number of stop bits. It is ignored in the synchronous mode.

Bit 3

STOP	**Description**	
0	One stop bit Transmit: one stop bit is added. Receive: one stop bit is checked to detect framing errors.	(Initial value)
1	Two stop bits Transmit: two stop bits are added. Receive: the first stop bit is checked to detect framing errors; if the second bit is a space (0), it is regarded as the next start bit.	

Bit 2—Multiprocessor Mode (MP): This bit selects the multiprocessor format in asynchronous communication. When multiprocessor format is selected, the parity settings of the parity enable bit (PE) and parity mode bit (O/$\overline{E}$) are ignored. The MP bit is ignored in synchronous communication.

The MP bit is valid only when the MPE bit in the serial/timer control register (STCR) is set to “1.” When the MPE bit is cleared to “0,” the multiprocessor communication function is disabled regardless of the setting of the MP bit.

Bit 2

MP	**Description**	
0	Multiprocessor communication function is disabled.	(Initial value)
1	Multiprocessor communication function is enabled.	

Bits 1 and 0—Clock Select 1 and 0 (CKS1 and CKS0): These bits select the internal clock source when the baud rate generator is clocked from within the chip.

Bit 1	**Bit 0**		
CKS1	**CKS0**	**Description**	
0	0	Ø clock	(Initial value)
0	1	Ø/4 clock	
1	0	Ø/16 clock	
1	1	Ø/64 clock	

8.2.6 Serial Control Register (SCR)—H'FFDA

Bit	7	6	5	4	3	2	1	0
	TIE	RIE	TE	RE	MPIE	TEIE	CKE1	CKE0
Initial value	0	0	0	0	0	0	0	0
Read/Write	R/W	R/W	R/W	R/W	R/W	R/W	R/W	R/W

The SCR is an 8-bit readable/writable register that enables or disables various SCI functions. It is initialized to H'00 at a reset and in the standby modes.

Bit 7—Transmit Interrupt Enable (TIE): This bit enables or disables the TDR-empty interrupt (TXI) requested when the transmit data register empty (TDRE) bit in the serial status register (SSR) is set to “1.”

Bit 7

TIE	Description	
0	The TDR-empty interrupt request (TXI) is disabled.	(Initial value)
1	The TDR-empty interrupt request (TXI) is enabled.	

Bit 6—Receive Interrupt Enable (RIE): This bit enables or disables the receive-end interrupt (RxI) requested when the receive data register full (RDRF) bit in the serial status register (SSR) is set to “1.” It also enables or disables the receive-error interrupt (ERI) requested when the overrun error (ORER), framing error (FER), or parity error (PER) bit is set to “1.”

Bit 6

RIE	Description	
0	The receive-end interrupt (RxI) and receive-error interrupt (ERI) requests are disabled.	(Initial value)
1	The receive-end interrupt (RxI) and receive-error interrupt (ERI) requests are enabled.	

Bit 5—Transmit Enable (TE): This bit enables or disables the transmit function. When the transmit function is enabled, the TxD pin is automatically used for output. When the transmit function is disabled, the TxD pin can be used as a general-purpose I/O port.

Bit 5

TE	Description	
0	The transmit function is disabled. The TxD pin can be used for general-purpose I/O.	(Initial value)
1	The transmit function is enabled. The TxD pin is used for output.	

Bit 4—Receive Enable (RE): This bit enables or disables the receive function. When the receive function is enabled, the RxD pin is automatically used for input. When the receive function is disabled, the RxD pin is available as a general-purpose I/O port.

Bit 4

RE	Description	
0	The receive function is disabled. The RxD pin can be used for general-purpose I/O.	(Initial value)
1	The receive function is enabled. The RxD pin is used for input.	

Bit 3—Multiprocessor Interrupt Enable (MPIE): When serial data are received in a multiprocessor format, this bit enables or disables the receive-end interrupt (RxI) and receive-error interrupt (ERI) until data with the multiprocessor bit set to “1” are received. It also enables or disables the transfer of received data from the RSR to the RDR, and enables or disables setting of the RDRF, FER, PER, and ORER bits in the serial status register (SSR).

The MPIE bit is ignored when a multiprocessor format is not used, and in synchronous mode.

Clearing the MPIE bit to “0” disables the multiprocessor receive interrupt function. In this condition data are received regardless of the value of the multiprocessor bit in the receive data.

Setting the MPIE bit to “1” enables the multiprocessor receive interrupt function. In this condition, if the multiprocessor bit in the receive data is “0,” the receive-end interrupt (RxI) and receive-error interrupt (ERI) are disabled, the receive data are not transferred from the RSR to the RDR, and the RDRF, FER, PER, and ORER bits in the serial status register (SSR) are not set. If the multiprocessor bit is “1,” however, the MPB bit in the SSR is set to “1,” the MPIE bit is cleared to “0,” the FER, PER, and ORER bits can be set, and the receive-end and receive-error interrupts are enabled.

Bit 3

MPIE	**Description**
0	The multiprocessor receive interrupt function is disabled. (Initial value) (Normal receive operation)
1	The multiprocessor receive interrupt function is enabled. During the interval before data with the multiprocessor bit set to “1” are received, the receive interrupt request (RxI) and receive-error interrupt request (ERI) are disabled, the RDRF, FER, PER, and ORER bits are not set in the serial status register (SSR), and no data are transferred from the RSR to the RDR. The MPIE bit is cleared at the following times: (1) When “0” is written in MPIE. (2) When data with the multiprocessor bit set to “1” are received.

Bit 2—Transmit-End Interrupt Enable (TEIE): This bit enables or disables the TSR-empty interrupt (TEI) requested when the transmit-end bit (TEND) in the serial status register (SSR) is set to “1.”

Bit 2

TEIE	Description	
0	The TSR-empty interrupt request (TEI) is disabled.	(Initial value)
1	The TSR-empty interrupt request (TEI) is enabled.	

Bit 1—Clock Enable 1 (CKE1): This bit selects the internal or external clock source for the baud rate generator. When the external clock source is selected, the SCK pin is automatically used for input of the external clock signal.

Bit 1

CKE1	Description	
0	Internal clock source. When C/$\overline{A}$ = “1,” the serial clock signal is output at the SCK pin. When C/$\overline{A}$ = “0,” output depends on the CKE0 bit.	(Initial value)
1	External clock source. The SCK pin is used for input.	

Bit 0—Clock Enable 0 (CKE0): When an internal clock source is used in asynchronous mode, this bit enables or disables serial clock output at the SCK pin.

This bit is ignored when the external clock is selected, or when synchronous mode is selected.

For further information on the communication format and clock source selection, see table 8-7 in section 8.3, “Operation.”

Bit 0

CKE0	Description	
0	The SCK pin is not used by the SCI (and is available as a general-purpose I/O port).	(Initial value)
1	The SCK pin is used for serial clock output.	

8.2.7 Serial Status Register (SSR)—H'FFDC

Bit	7	6	5	4	3	2	1	0
	TDRE	RDRF	ORER	FER	PER	TEND	MPB	MPBT
Initial value	1	0	0	0	0	1	0	0
Read/Write	R/(W)*	R/(W)*	R/(W)*	R/(W)*	R/(W)*	R	R	R/W

Note: * Software can write a “0” to clear the flags, but cannot write a “1” in these bits.

The SSR is an 8-bit register that indicates transmit and receive status. It is initialized to H'84 at a reset and in the standby modes.

Bit 7—Transmit Data Register Empty (TDRE): This bit indicates when the TDR contents have been transferred to the TSR and the next character can safely be written in the TDR.

Bit 7

TDRE	Description	
0	To clear TDRE, the CPU must read TDRE after it has been set to “1,” then write a “0” in this bit.	
1	This bit is set to 1 at the following times: (1) When TDR contents are transferred to the TSR. (2) When the TE bit in the SCR is cleared to “0.”	(Initial value)

Bit 6—Receive Data Register Full (RDRF): This bit indicates when one character has been received and transferred to the RDR.

Bit 6

RDRF	Description	
0	To clear RDRF, the CPU must read RDRF after it has been set to “1,” then write a “0” in this bit.	(Initial value)
1	This bit is set to 1 when one character is received without error and transferred from the RSR to the RDR.	

Bit 5—Overrun Error (ORER): This bit indicates an overrun error during reception.

Bit 5

ORER	Description	
0	To clear ORER, the CPU must read ORER after it has been set to “1,” then write a “0” in this bit.	(Initial value)
1	This bit is set to 1 if reception of the next character ends while the receive data register is still full (RDRF = “1”).	

Bit 4—Framing Error (FER): This bit indicates a framing error during data reception in asynchronous mode. It has no meaning in synchronous mode.

Bit 4

FER	Description	
0	To clear FER, the CPU must read FER after it has been set to “1,” then write a “0” in this bit.	(Initial value)
1	This bit is set to 1 if a framing error occurs (stop bit = “0”).	

Bit 3—Parity Error (PER): This bit indicates a parity error during data reception in the asynchronous mode, when a communication format with parity bits is used.

This bit has no meaning in the synchronous mode, or when a communication format without parity bits is used.

Bit 3

PER	Description	
0	To clear PER, the CPU must read PER after it has been set to “1,” then write a “0” in this bit.	(Initial value)
1	This bit is set to “1” when a parity error occurs (the parity of the received data does not match the parity selected by the O/$\overline{E}$ bit in SMR).	

Bit 2—Transmit End (TEND): This bit indicates that transmission of a character has ended and the serial communication interface has stopped transmitting because there is no valid data in the TDR. The TEND bit is also set to “1” when the TE bit in the serial control register (SCR) is cleared to “0.”

The TEND bit can be read but not written. To use the TEI interrupt, after TEND is cleared to “0” at the start of data transmission, set TEIE to “1” to enable the interrupt.

Bit 2

TEND	Description	
0	To clear TEND, the CPU must read TDRE after it has been set to “1,” then write a “0” in TDRE.	(Initial value)
1	This bit is set to “1” when: (1) TE = “0” (2) TDRE = “1” at the end of transmission of a character	

Bit 1—Multiprocessor Bit (MPB): Stores the value of the multiprocessor bit in data received in a multiprocessor format in asynchronous communication mode. In synchronous mode, when a multiprocessor format is not used, or if the RE bit is cleared to “0” when a multiprocessor format is used, the MPB bit retains its previous value.

MPB can be read but not written.

Bit 1

MPB	Description	
0	Multiprocessor bit = “0” in receive data.	(Initial value)
1	Multiprocessor bit = “1” in receive data.	

Bit 0—Multiprocessor Bit Transfer (MPBT): Stores the value of the multiprocessor bit inserted in transmit data when a multiprocessor format is used in asynchronous communication mode. The MPBT bit is double-buffered, in the same way that TSR and TDR are double-buffered. The MPBT bit has no effect in synchronous mode, or when a multiprocessor format is not used.

Bit 0

MPBT	Description	
0	Multiprocessor bit = “0” in transmit data.	(Initial value)
1	Multiprocessor bit = “1” in transmit data.	

8.2.8 Bit Rate Register (BRR)—H'FFD9

Bit	7	6	5	4	3	2	1	0
Initial value	1	1	1	1	1	1	1	1
Read/Write	R/W	R/W	R/W	R/W	R/W	R/W	R/W	R/W

The BRR is an 8-bit register that, together with the CKS1 and CKS0 bits in the SMR, determines the baud rate output by the baud rate generator.

The BRR is initialized to H'FF (the slowest rate) at a reset and in the standby modes.

Tables 8-3 and 8-4 show examples of BRR (N) and CKS (n) settings for commonly used bit rates.

Table 8-3. Examples of BRR Settings in Asynchronous Mode (1)

	XTAL frequency (MHz)											
	2			**2.4576**			**4**			**4.194304**		
Bit rate	**n**	**N**	**Error (%)**	**n**	**N**	**Error (%)**	**n**	**N**	**Error (%)**	**n**	**N**	**Error (%)**
110	1	70	+0.03	1	86	+0.31	1	141	+0.03	1	148	–0.04
150	0	207	+0.16	0	255	0	1	103	+0.16	1	108	+0.21
300	0	103	+0.16	0	127	0	0	207	+0.16	0	217	+0.21
600	0	51	+0.16	0	63	0	0	103	+0.16	0	108	+0.21
1200	0	25	+0.16	0	31	0	0	51	+0.16	0	54	–0.70
2400	0	12	+0.16	0	15	0	0	25	+0.16	0	26	+1.14
4800	—	—	—	0	7	0	0	12	+0.16	0	13	–2.48
9600	—	—	—	0	3	0	—	—	—	0	6	–2.48
19200	—	—	—	0	1	0	—	—	—	—	—	—
31250	0	0	0	—	—	—	0	1	0	—	—	—
38400	—	—	—	0	0	0	—	—	—	—	—	—

Table 8-3. Examples of BRR Settings in Asynchronous Mode (2)

	XTAL frequency (MHz)											
	4.9152			6			7.3728			8		
Bit rate	n	N	Error (%)	n	N	Error (%)	n	N	Error (%)	n	N	Error (%)
110	1	174	–0.26	2	52	+0.50	2	64	+0.70	2	70	+0.03
150	1	127	0	1	155	+0.16	1	191	0	1	207	+0.16
300	0	255	0	1	77	+0.16	1	95	0	1	103	+0.16
600	0	127	0	0	155	+0.16	0	191	0	0	207	+0.16
1200	0	63	0	0	77	+0.16	0	95	0	0	103	+0.16
2400	0	31	0	0	38	+0.16	0	47	0	0	51	+0.16
4800	0	15	0	0	19	–2.34	0	23	0	0	25	+0.16
9600	0	7	0	0	9	–2.34	0	11	0	0	12	+0.16
19200	0	3	0	0	4	–2.34	0	5	0	—	—	—
31250	—	—	—	0	2	0	—	—	—	0	3	0
38400	0	1	0	—	—	—	0	2	0	—	—	—

Table 8-3. Examples of BRR Settings in Asynchronous Mode (3)

	XTAL frequency (MHz)											
	9.8304			10			12			12.288		
Bit rate	n	N	Error (%)	n	N	Error (%)	n	N	Error (%)	n	N	Error (%)
110	2	86	+0.31	2	88	–0.25	2	106	–0.44	2	108	+0.08
150	1	255	0	2	64	+0.16	2	77	0	2	79	0
300	1	127	0	1	129	+0.16	1	155	0	1	159	0
600	0	255	0	1	64	+0.16	1	77	0	1	79	0
1200	0	127	0	0	129	+0.16	0	155	+0.16	0	159	0
2400	0	63	0	0	64	+0.16	0	77	+0.16	0	79	0
4800	0	31	0	0	32	–1.36	0	38	+0.16	0	39	0
9600	0	15	0	0	15	+1.73	0	19	–2.34	0	19	0
19200	0	7	0	0	7	+1.73	—	—	—	0	4	0
31250	0	4	–1.70	0	4	0	0	5	0	0	5	+2.40
38400	0	3	0	0	3	+1.73	—	—	—	—	—	—

Table 8-3. Examples of BRR Settings in Asynchronous Mode (4)

	XTAL frequency (MHz)											
	14.7456			16			19.6608			20		
Bit rate	n	N	Error (%)	n	N	Error (%)	n	N	Error (%)	n	N	Error (%)
110	2	130	–0.07	2	141	+0.03	2	174	–0.26	3	43	+0.88
150	2	95	0	2	103	+0.16	2	127	0	2	129	+0.16
300	1	191	0	1	207	+0.16	1	255	0	2	64	+0.16
600	1	95	0	1	103	+0.16	1	127	0	1	129	+0.16
1200	0	191	0	0	207	+0.16	0	255	0	1	64	+0.16
2400	0	95	0	0	103	+0.16	0	127	0	0	129	+0.16
4800	0	47	0	0	51	+0.16	0	63	0	0	64	+0.16
9600	0	23	0	0	25	+0.16	0	31	0	0	32	–1.36
19200	0	11	0	0	12	+0.16	0	15	0	0	15	+1.73
31250	—	—	—	0	7	0	0	9	–1.70	0	9	0
38400	0	5	0	—	—	—	0	7	0	0	7	+1.73

Note: If possible, the error should be within 1%.

$$B = OSC \times 10^6/[64 \times 2^{2n} \times (N + 1)]$$

N: BRR value ($0 \leq N \leq 255$)

OSC: Crystal oscillator frequency in MHz

B: Bit rate (bits/second)

n: Internal clock source (0, 1, 2, or 3)

The meaning of n is given by the table below:

n	CKS1	CKS0	Clock
0	0	0	Ø
1	0	1	Ø/4
2	1	0	Ø/16
3	1	1	Ø/64

Table 8-4. Examples of BRR Settings in Synchronous Mode

	XTAL frequency (MHz)											
Bit	**2**		**4**		**8**		**10**		**16**		**20**	
rate	**n**	**N**	**n**	**N**	**n**	**N**	**n**	**N**	**n**	**N**	**n**	**N**
100	—	—	—	—	—	—	—	—	—	—	—	—
250	1	249	2	124	2	249	—	—	3	124	—	—
500	1	124	1	249	2	124	—	—	2	249	—	—
1k	0	249	1	124	1	249	—	—	2	124	—	—
2.5k	0	99	0	199	1	99	1	124	1	199	1	249
5k	0	49	0	99	0	199	0	249	1	99	1	124
10k	0	24	0	49	0	99	0	124	0	199	0	249
25k	0	9	0	19	0	39	0	49	0	79	0	99
50k	0	4	0	9	0	19	0	24	0	39	0	49
100k	—	—	0	4	0	9	—	—	0	19	0	24
250k	0	0*	0	1	0	3	0	4	0	7	0	9
500k			0	0*	0	1	—	—	0	3	0	4
1M					0	0*	—	—	0	1	—	—
2.5M											0	0*

Notes: Blank: No setting is available.

—: A setting is available, but the bit rate is inaccurate.

* Continuous transfer is not possible.

$$B = OSC \times 10^6/[8 \times 2^{2n} \times (N + 1)]$$

N: BRR value ($0 \leq N \leq 255$)

OSC: Crystal oscillator frequency in MHz

B: Bit rate (bits/second)

n: Internal clock source (0, 1, 2, or 3)

The meaning of n is given by the table below:

n	**CKS1**	**CKS0**	**Clock**
0	0	0	Ø
1	0	1	Ø/4
2	1	0	Ø/16
3	1	1	Ø/64

8.2.9 Serial/Timer Control Register (STCR)—H'FFC3

Bit	7	6	5	4	3	2	1	0
	—	—	—	—	—	MPE	ICKS1	ICKS0
Initial value	1	1	1	1	1	0	0	0
Read/Write	—	—	—	—	—	R/W	R/W	R/W

The STCR is an 8-bit readable/writable register that controls the operating mode of the serial communication interface and selects input clock sources for the 8-bit timer counters (TCNT). The STCR is initialized to H'F8 by a reset.

Bits 7 to 3—Reserved: These bits cannot be modified and are always read as “1.”

Bit 2—Multiprocessor Enable (MPE): Enables or disables the SCI’s multiprocessor communication function.

Bit 2

MPE	Description	
0	The multiprocessor communication function is disabled, regardless of the setting of the MP bit in SMR.	(Initial value)
1	The multiprocessor communication function is enabled. The multi-processor format can be selected by setting the MP bit in SMR to “1.”	

Bits 1 and 0—Internal Clock Source Select 1 and 0 (ICKS1, ICKS0): These bits select the clock input to the timer counters (TCNT) in the 8-bit timers. For further information see section 7.2.3, “Timer Control Register.”

8.3 Operation

8.3.1 Overview

The SCI supports serial data transfer in two modes. In asynchronous mode each character is synchronized individually. In synchronous mode communication is synchronized with a clock signal.

The selection of asynchronous or synchronous mode and the communication format depend on settings in the SMR as indicated in table 8-5. The clock source depends on the settings of the C/$\overline{A}$ bit in the SMR and the CKE1 and CKE0 bits in the SCR as indicated in table 8-6.

(1) Asynchronous Mode:

- Data lengths of seven or eight bits can be selected.
- A parity bit or multiprocessor bit can be added, and stop bit lengths of one or two bits can be selected. These selections determine the communication format and character length.
- Framing errors (FER), parity errors (PER) and overrun errors (ORER) can be detected in receive data, and the line-break condition can be detected.
- An internal or external clock source can be selected for the serial clock.
- When an internal clock source is selected, the SCI is clocked by the on-chip baud rate generator and can output a clock signal at the bit-rate frequency.
- When the external clock source is selected, the on-chip baud rate generator is not used. The external clock frequency must be 16 times the bit rate.

(2) Synchronous Mode:

- The transmit data length is eight bits.
- Overrun errors (ORER) can be detected in receive data.
- An internal or external clock source can be selected for the serial clock.
- When an internal clock source is selected, the SCI is clocked by the on-chip baud rate generator and outputs a serial clock signal.
- When the external clock source is selected, the on-chip baud rate generator is not used and the SCI operates on the input serial clock.

Table 8-5. Communication Formats Used by SCI

SMR settings						Communication format			
Bit 7	**Bit 6**	**Bit 2**	**Bit 5**	**Bit 3**		**Data**	**Multipro-**	**Parity**	**Stop-bit**
C/$\overline{A}$	**CHR**	**MP**	**PE**	**STOP**	**Mode**	**length**	**cessor bit**	**bit**	**length**
0	0	0	0	0	Asynchronous mode	8 bits	None	None	1 bit
				1					2 bits
			1	0				Present	1 bit
				1					2 bits
	1		0	0		7 bits		None	1 bit
				1					2 bits
			1	0				Present	1 bit
				1					2 bits
	0	1	—	0	Asynchronous mode	8 bits	Present	None	1 bit
				1	(multiprocessor				2 bits
	1			0	format)	7 bits			1 bit
				1					2 bits
1	—	—	—	—	Synchronous mode	8 bits	None		None

Table 8-6. SCI Clock Source Selection

SMR	SCR			Serial transmit/receive clock	
Bit 7	**Bit 1**	**Bit 0**			
C/$\overline{A}$	**CKE1**	**CKE0**	**Mode**	**Clock source**	**SCK pin function**
0	0	0	Async	Internal	Input/output port (not used by SCI)
		1			Serial clock output at bit rate
	1	0		External	Serial clock input at 16 × bit rate
		1			
1	0	0	Sync	Internal	Serial clock output
		1			
	1	0		External	Serial clock input
		1			

8.3.2 Asynchronous Mode

In asynchronous mode, each transmitted or received character is individually synchronized by framing it with a start bit and stop bit.

Full duplex data transfer is possible because the SCI has independent transmit and receive sections. Double buffering in both sections enables data to be written and read during serial communication, for continuous data transfer.

Figure 8-2 shows the general format of one character sent or received in asynchronous mode. The communication channel is normally held in the mark state (High). Character transmission or reception starts with a transition to the space state (Low).

The first bit transmitted or received is the start bit (Low). It is followed by the data bits, in which the least significant bit (LSB) comes first. The data bits are followed by the parity or multiprocessor bit, if present, then the stop bit or bits (High) confirming the end of the frame.

In receiving, the SCI synchronizes on the falling edge of the start bit, and samples each bit at the center of the bit (at the 8th cycle of the internal serial clock, which runs at 16 times the bit rate).

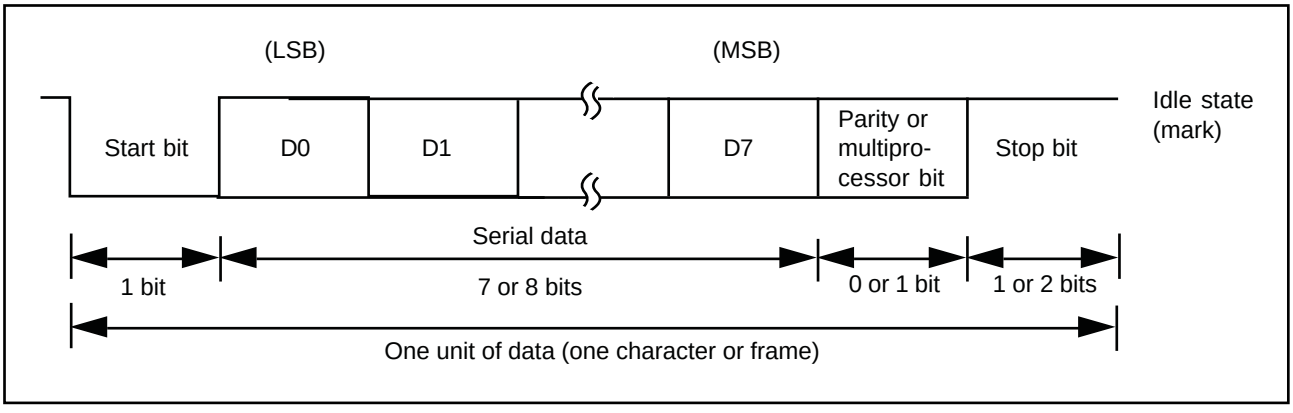

Figure 8-2. Data Format in Asynchronous Mode

(1) Data Format: Table 8-7 lists the data formats that can be sent and received in asynchronous mode. Twelve formats can be selected by bits in the SMR.

Table 8-7. Data Formats in Asynchronous Mode

SMR Bits															
CHR	**PE**	**MP**	**STOP**	**1**	**2**	**3**	**4**	**5**	**6**	**7**	**8**	**9**	**10**	**11**	**12**
0	0	0	0	S	8-Bit data								STOP		
0	0	0	1	S	8-Bit data								STOP	STOP	
0	1	0	0	S	8-Bit data								P	STOP	
0	1	0	1	S	8-Bit data								P	STOP	STOP
1	0	0	0	S	7-Bit data							STOP			
1	0	0	1	S	7-Bit data							STOP	STOP		
1	1	0	0	S	7-Bit data							P	STOP		
1	1	0	1	S	7-Bit data							P	STOP	STOP	
0	—	1	0	S	8-Bit data								MPB	STOP	
0	—	1	1	S	8-Bit data								MPB	STOP	STOP
1	—	1	0	S	7-Bit data							MPB	STOP		
1	—	1	1	S	7-Bit data							MPB	STOP	STOP	

Notes: SMR: Serial mode register

START: Start bit

STOP: Stop bit

P: Parity bit

MPB: Multiprocessor bit

(2) Clock: In asynchronous mode it is possible to select either an internal clock created by the on-chip baud rate generator, or an external clock input at the SCK pin. The clock selection depends on the C/$\overline{A}$ bit in the serial mode register (SMR) and the CKE0 and CKE1 bits in the serial control register (SCR). Refer to table 8-6.

If an external clock is input at the SCK pin, its frequency should be 16 times the desired bit rate.

If the internal clock provided by the on-chip baud rate generator is selected and the SCK pin is used for clock output, the output clock frequency is equal to the bit rate, and the clock pulse rises at the center of the transmit data bits. Figure 8-3 shows the phase relationship between the output clock and transmit data.

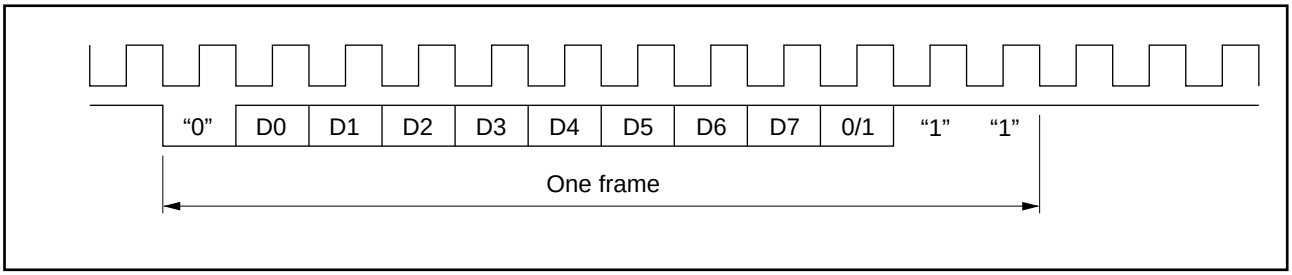

Figure 8-3. Phase Relationship between Clock Output and Transmit Data (Asynchronous Mode)

(3) Transmitting and Receiving Data

• **SCI Initialization:** Before transmitting or receiving, software must clear the TE and RE bits to "0" in the serial control register (SCR), then initialize the SCI as follows.

Note: When changing the communication mode or format, always clear the TE and RE bits to "0" before following the procedure given below. Clearing TE to "0" sets TDRE to "1" and initializes the transmit shift register (TSR). Clearing RE to "0," however, does not initialize the RDRF, PER, FER, and ORER flags and receive data register (RDR), which retain their previous contents.

When an external clock is used, the clock should not be stopped during initialization or subsequent operation. SCI operation becomes unreliable if the clock is stopped.

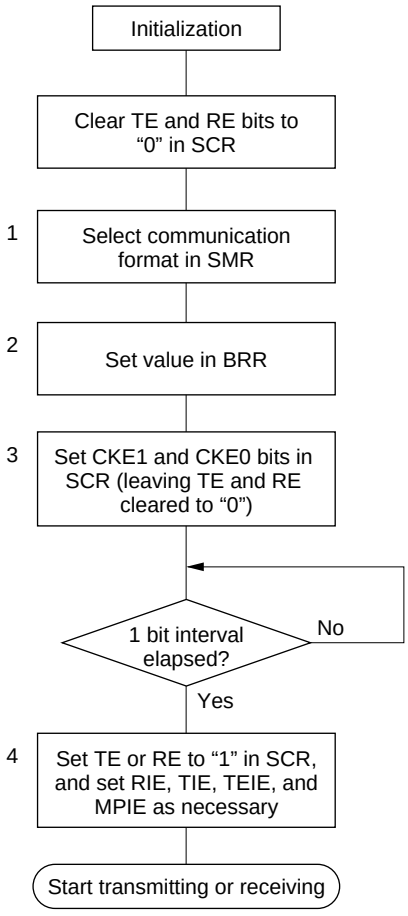

1. Select the communication format in the serial mode register (SMR).

2. Write the value corresponding to the bit rate in the bit rate register (BRR). This step is not necessary when an external clock is used.

3. Select interrupts and the clock source in the serial control register (SCR). Leave TE and RE cleared to "0." If clock output is selected, in asynchronous mode, clock output starts immediately after the setting is made in SCR.

4. Wait for at least the interval required to transmit or receive one bit, then set TE or RE in the serial control register (SCR).
Setting TE or RE enables the SCI to use the TxD or RxD pin.
Also set the RIE, TIE, TEIE, and MPIE bits as necessary to enable interrupts. The initial states are the mark transmit state, and the idle receive state (waiting for a start bit).

Figure 8-4. Sample Flowchart for SCI Initialization

- **Transmitting Serial Data:** Follow the procedure below for transmitting serial data.

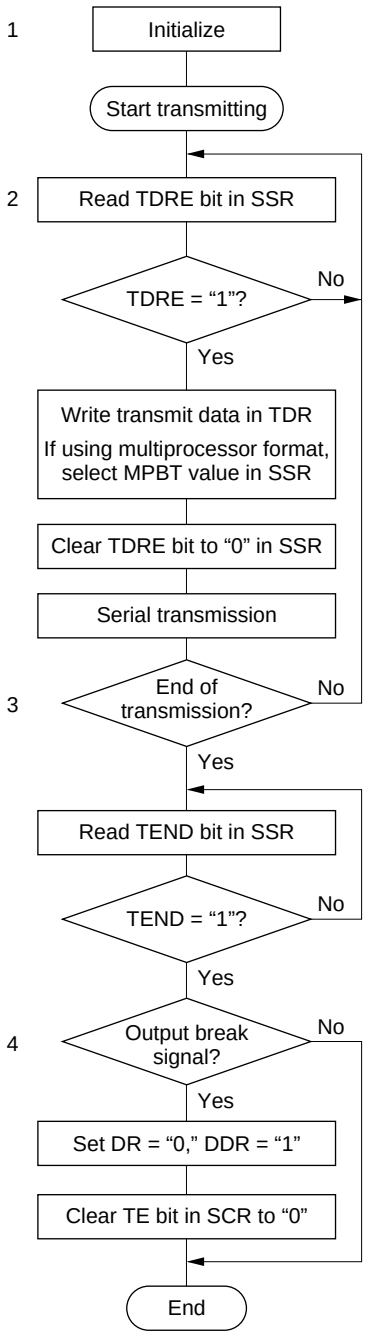

1. SCI initialization: the transmit data output function of the TxD pin is selected automatically.

2. SCI status check and transmit data write: read the serial status register (SSR), check that the TDRE bit is “1,” then write transmit data in the transmit data register (TDR) and clear TDRE to “0.” If a multiprocessor format is selected, after writing the transmit data write “0” or “1” in the multiprocessor bit transfer (MPBT) in SSR. Transition of the TDRE bit from “0” to “1” can be reported by an interrupt.

3. (a) To continue transmitting serial data: read the TDRE bit to check whether it is safe to write; if TDRE = “1,” write data in TDR, then clear TDRE to “0.”
   (b) To end serial transmission: end of transmission can be confirmed by checking transition of the TEND bit from “0” to “1.” This can be reported by a TEI interrupt.

4. To output a break signal at the end of serial transmission: set the DDR bit to “1” and clear the DR bit to “0” (DDR and DR are I/O port registers), then clear TE to “0” in SCR.

Figure 8-5. Sample Flowchart for Transmitting Serial Data

In transmitting serial data, the SCI operates as follows.

1. The SCI monitors the TDRE bit in SSR. When TDRE is cleared to “0” the SCI recognizes that the transmit data register (TDR) contains new data, and loads this data from TDR into the transmit shift register (TSR).

2. After loading the data from TDR into TSR, the SCI sets the TDRE bit to “1” and starts transmitting. If the TIE bit (TDR-empty interrupt enable) is set to “1” in SCR, the SCI requests a TXI interrupt (TDR-empty interrupt) at this time.

Serial transmit data are transmitted in the following order from the TxD pin:

(a) Start bit: one “0” bit is output.

(b) Transmit data: seven or eight bits are output, LSB first.

(c) Parity bit or multiprocessor bit: one parity bit (even or odd parity) or one multiprocessor bit is output. Formats in which neither a parity bit nor a multiprocessor bit is output can also be selected.

(d) Stop bit: one or two “1” bits (stop bits) are output.

(e) Mark state: output of “1” bits continues until the start bit of the next transmit data.

3. The SCI checks the TDRE bit when it outputs the stop bit. If TDRE is “0,” the SCI loads new data from TDR into TSR, outputs the stop bit, then begins serial transmission of the next frame. If TDRE is “1,” the SCI sets the TEND bit to “1” in SSR, outputs the stop bit, then continues output of “1” bits in the mark state. If the TEIE bit (TSR-empty interrupt enable) in SCR is set to “1,” a TEI interrupt (TSR-empty interrupt) is requested.

Figure 8-6 shows an example of SCI transmit operation in asynchronous mode.

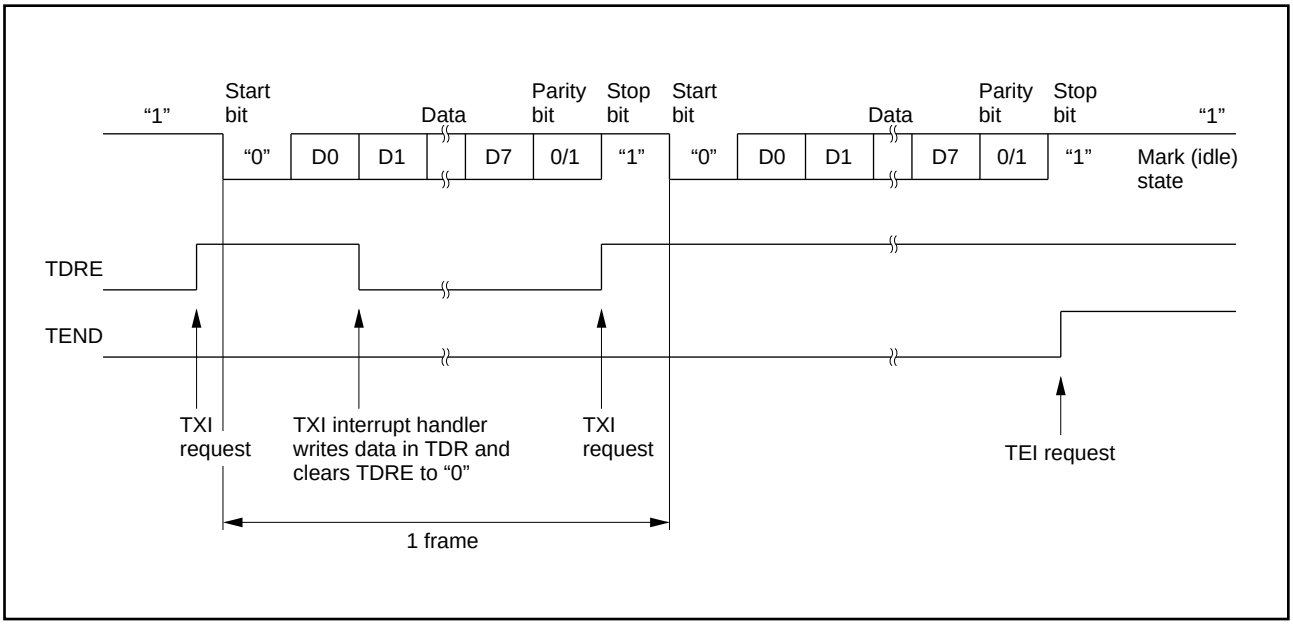

Figure 8-6. Example of SCI Transmit Operation (8-Bit Data with Parity and One Stop Bit)

- **Receiving Serial Data:** Follow the procedure below for receiving serial data.

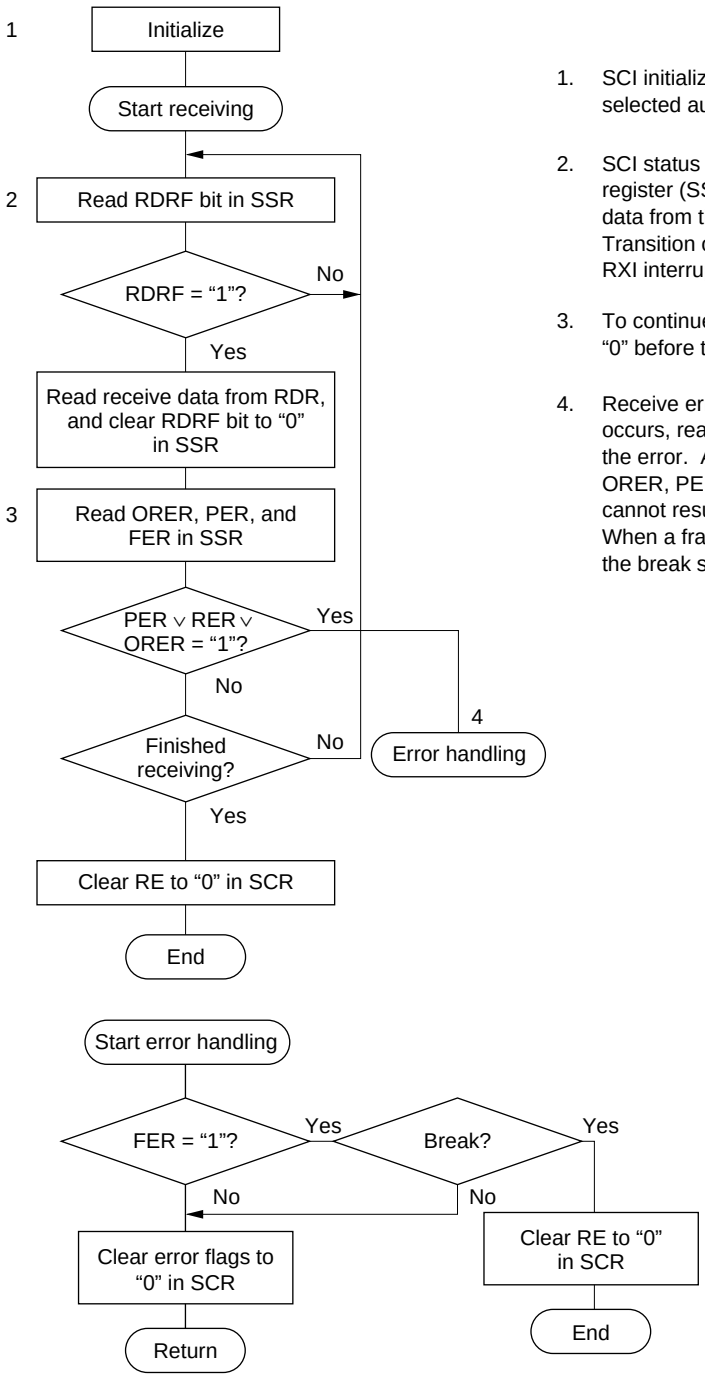

1. SCI initialization: the receive data function of the RxD pin is selected automatically.

2. SCI status check and receive data read: read the serial status register (SSR), check that RDRF is set to “1,” then read receive data from the receive data register (RDR) and clear RDRF to “0.” Transition of the RDRF bit from “0” to “1” can be reported by an RXI interrupt.

3. To continue receiving serial data: read RDR and clear RDRF to “0” before the stop bit of the current frame is received.

4. Receive error handling and break detection: if a receive error occurs, read the ORER, PER, and FER bits in SSR to identify the error. After executing the necessary error handling, clear ORER, PER, and FER all to “0.” Transmitting and receiving cannot resume if ORER, PER, or FER remains set to “1.” When a framing error occurs, the RxD pin can be read to detect the break state.

Figure 8-7. Sample Flowchart for Receiving Serial Data

In receiving, the SCI operates as follows.

1. The SCI monitors the receive data line and synchronizes internally when it detects a start bit.

2. Receive data are shifted into RSR in order from LSB to MSB.

3. The parity bit and stop bit are received.

After receiving these bits, the SCI makes the following checks:

(a) Parity check: the number of 1s in the receive data must match the even or odd parity setting of the O/$\overline{E}$ bit in SMR.

(b) Stop bit check: the stop bit value must be "1." If there are two stop bits, only the first stop bit is checked.

(c) Status check: RDRF must be "0" so that receive data can be loaded from RSR into RDR.

If these checks all pass, the SCI sets RDRF to "1" and stores the received data in RDR. If one of the checks fails (receive error), the SCI operates as indicated in table 8-8.

Note: When a receive error flag is set, further receiving is disabled. The RDRF bit is not set to "1." Be sure to clear the error flags.

4. After setting RDRF to "1," if the RIE bit (receive-end interrupt enable) is set to "1" in SCR, the SCI requests an RXI (receive-end) interrupt. If one of the error flags (ORER, PER, or FER) is set to "1" and the RIE bit in SCR is also set to "1," the SCI requests an ERI (receive-error) interrupt.

Figure 8-8 shows an example of SCI receive operation in asynchronous mode.

Table 8-8. Receive Error Conditions and SCI Operation

Receive error	Abbreviation	Condition	Data transfer
Overrun error	ORER	Receiving of next data ends while RDRF is still set to “1” in SSR	Receive data not loaded from RSR into RDR
Framing error	FER	Stop bit is “0”	Receive data loaded from RSR into RDR
Parity error	PER	Parity of receive data differs from even/odd parity setting in SMR	Receive data loaded from RSR into RDR

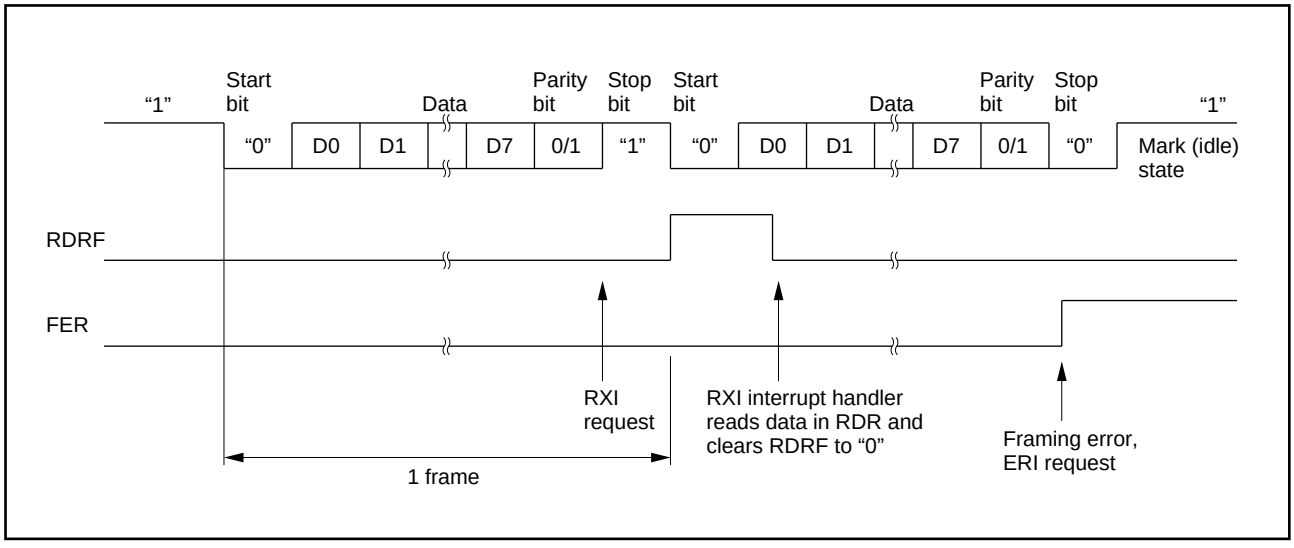

Figure 8-8. Example of SCI Receive Operation (8-Bit Data with Parity and One Stop Bit)

(4) Multiprocessor Communication

The multiprocessor communication function enables several processors to share a single serial communication line. The processors communicate in asynchronous mode using a format with an additional multiprocessor bit (multiprocessor format).

In multiprocessor communication, each receiving processor is addressed by an ID.

A serial communication cycle consists of two cycles: an ID-sending cycle that identifies the receiving processor, and a data-sending cycle. The multiprocessor bit distinguishes ID-sending cycles from data-sending cycles.

The transmitting processor starts by sending the ID of the receiving processor with which it wants to communicate as data with the multiprocessor bit set to “1.” Next the transmitting processor sends transmit data with the multiprocessor bit cleared to “0.”

Receiving processors skip incoming data until they receive data with the multiprocessor bit set to “1.”

After receiving data with the multiprocessor bit set to “1,” the receiving processor with an ID matching the received data continues to receive further incoming data. Multiple processors can send and receive data in this way.
Four formats are available. Parity-bit settings are ignored when a multiprocessor format is selected. For details see table 8-7.

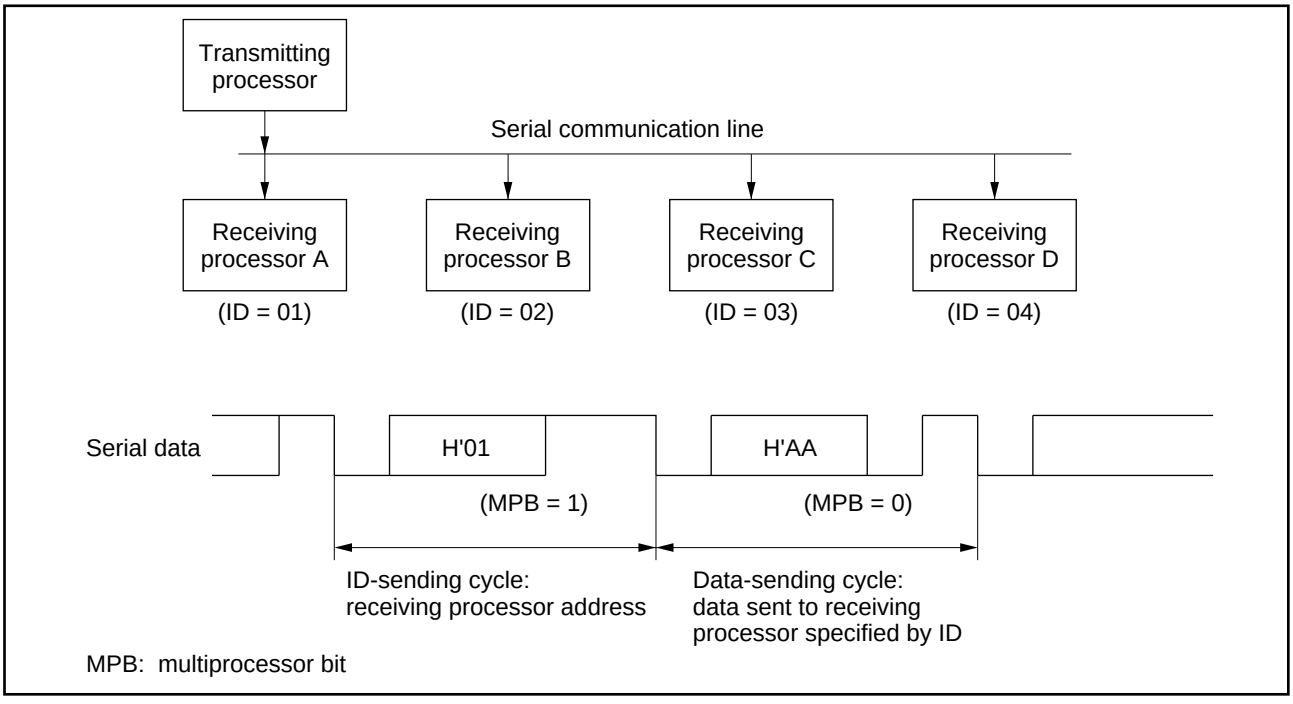

Figure 8-9. Example of Communication among Processors Using Multiprocessor Format (Sending Data H'AA to Receiving Processor A)

• **Transmitting Multiprocessor Serial Data:** See figures 8-5 and 8-6.

• **Receiving Multiprocessor Serial Data:** Follow the procedure below for receiving multiprocessor serial data.

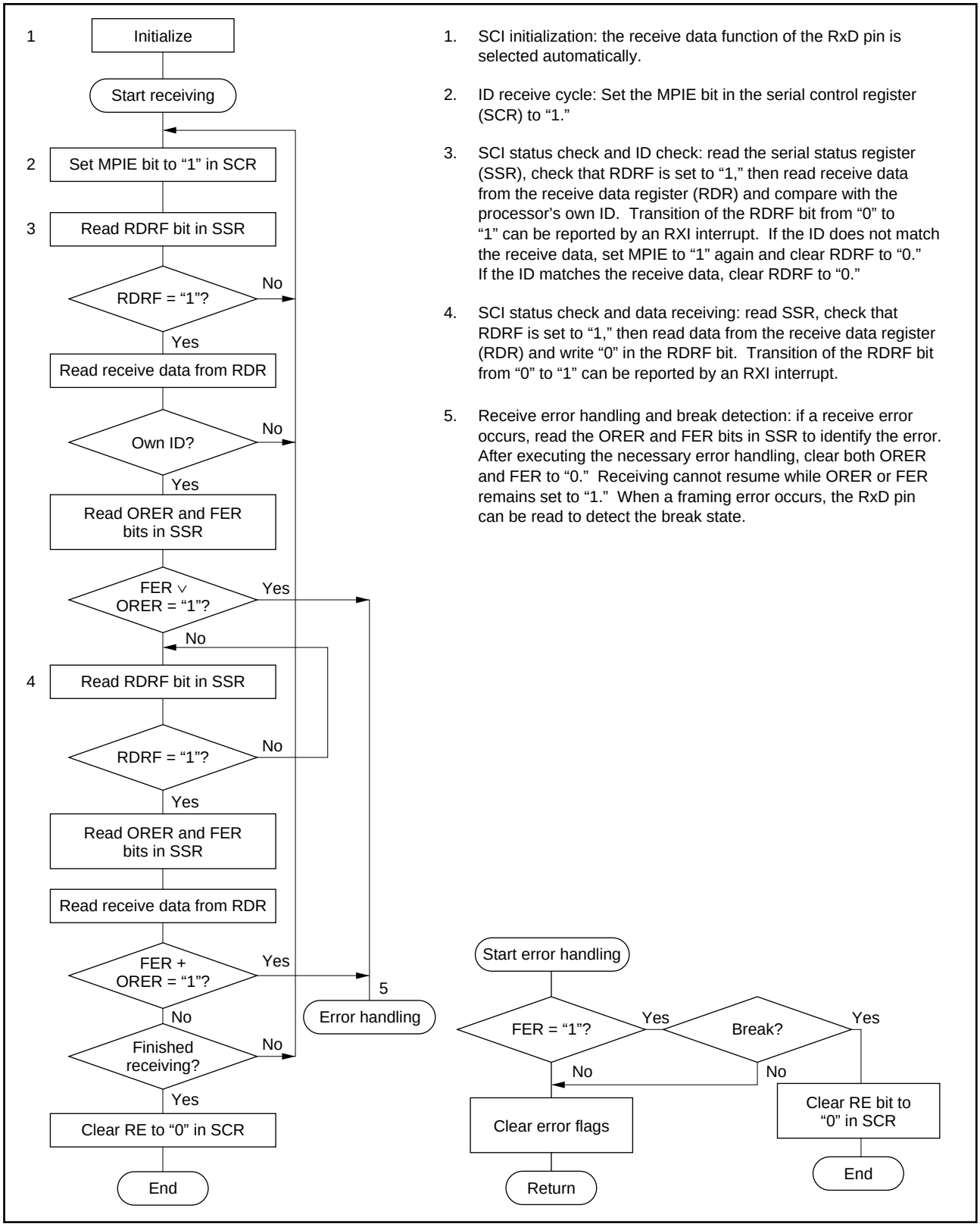

Figure 8-10. Sample Flowchart for Receiving Multiprocessor Serial Data

Figure 8-11 shows an example of SCI receive operation using a multiprocessor format.

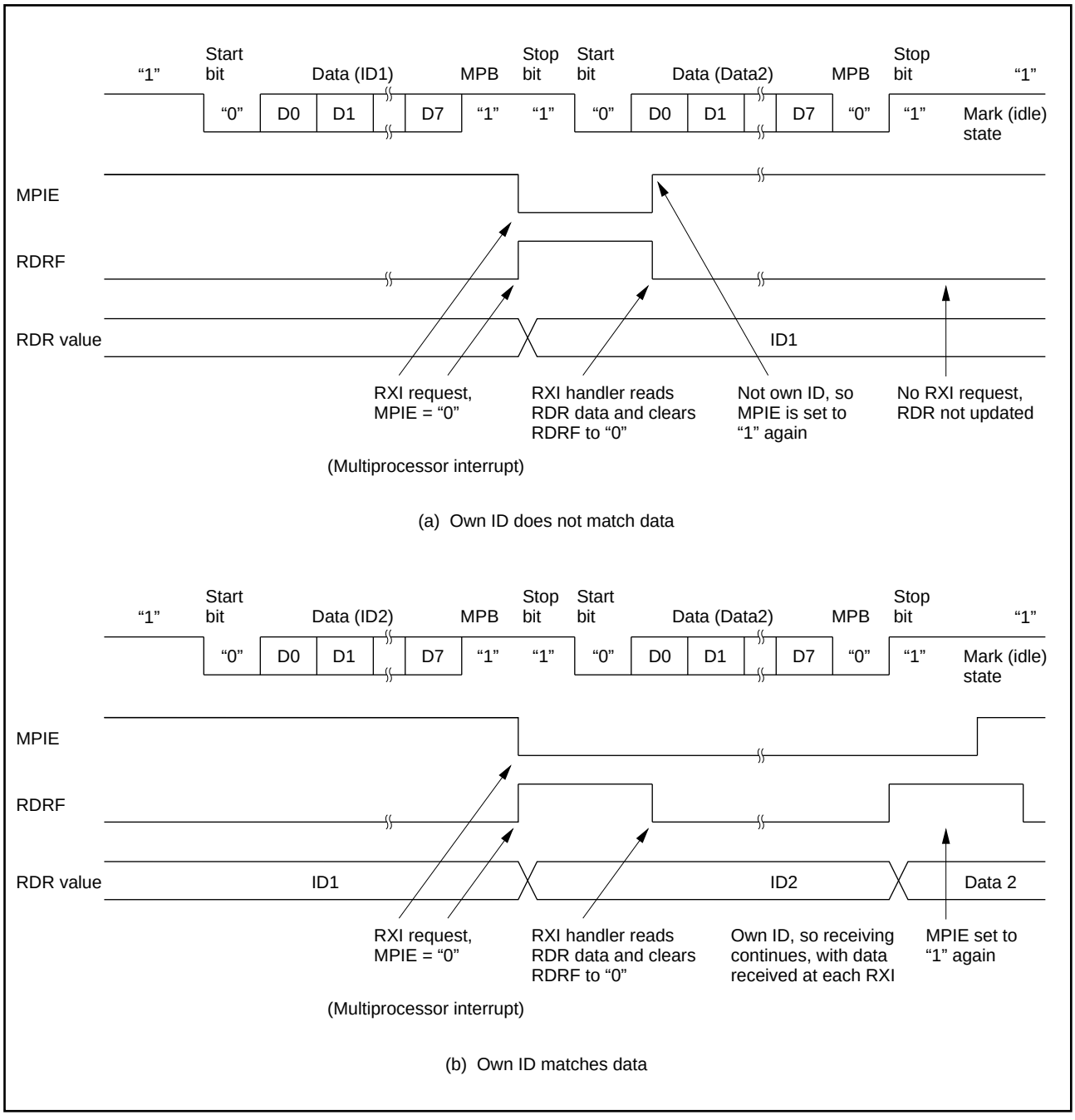

Figure 8-11. Example of SCI Receive Operation (Eight-Bit Data with Multiprocessor Bit and One Stop Bit)

8.3.3 Clocked Synchronous Operation

(1) Overview: In clocked synchronous mode, the SCI transmits and receives data in synchronization with clock pulses. This mode is suitable for high-speed serial communication.

The SCI transmitter and receiver share the same clock but are otherwise independent, so full duplex communication is possible. The transmitter and receiver are also double buffered, so continuous transmitting or receiving is possible by reading or writing data while transmitting or receiving is in progress.

Figure 8-12 shows the general format in clocked synchronous serial communication.

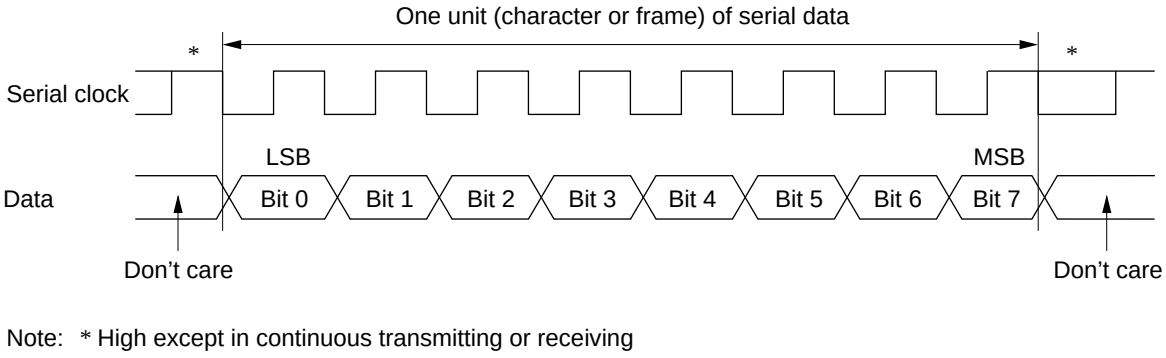

Figure 8-12. Data Format in Clocked Synchronous Communication

In clocked synchronous serial communication, each data bit is sent on the communication line from one falling edge of the serial clock to the next. Data are received in synchronization with the rising edge of the serial clock.

In each character, the serial data bits are transmitted in order from LSB (first) to MSB (last). After output of the MSB, the communication line remains in the state of the MSB until the next falling edge of the serial clock.

• **Communication Format:** The data length is fixed at eight bits. No parity bit or multiprocessor bit can be added.

• **Clock:** An internal clock generated by the on-chip baud rate generator or an external clock input from the SCK pin can be selected by clearing or setting the CKE1 bit in the serial control register (SCR). See table 8-5.

When the SCI operates on an internal clock, it outputs the clock signal at the SCK pin. Eight clock pulses are output per transmitted or received character. When the SCI is not transmitting or receiving, the clock signal remains at the high level.

(2) Transmitting and Receiving Data

• **SCI Initialization:** The SCI must be initialized in the same way as in asynchronous mode. See figure 8-4. When switching from asynchronous mode to clocked synchronous mode, check that the ORER, FER, and PER bits are cleared to “0.” Transmitting and receiving cannot begin if ORER, FER, or PER is set to “1.”

- **Transmitting Serial Data:** Follow the procedure below for transmitting serial data.

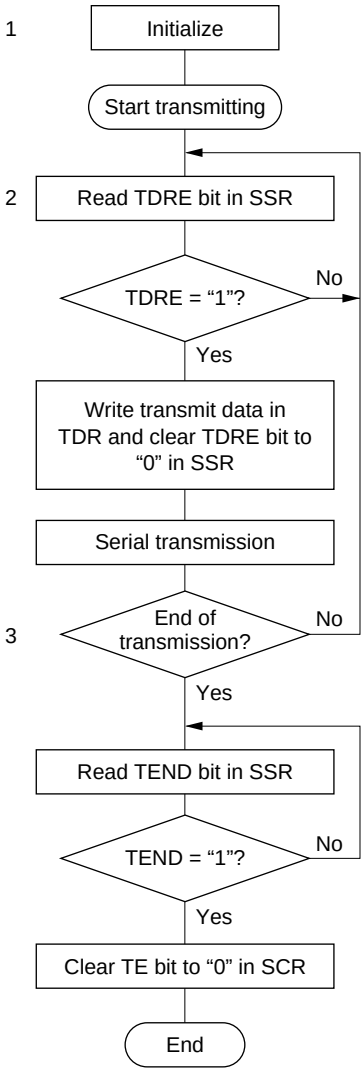

1. SCI initialization: the transmit data output function of the TxD pin is selected automatically.

2. SCI status check and transmit data write: read the serial status register (SSR), check that the TDRE bit is “1,” then write transmit data in the transmit data register (TDR) and clear TDRE to “0.” Transition of the TDRE bit from “0” to “1” can be reported by a TXI interrupt.

3. (a) To continue transmitting serial data: read the TDRE bit to check whether it is safe to write; if TDRE = “1,” write data in TDR, then clear TDRE to “0.”
   (b) To end serial transmission: end of transmission can be confirmed by checking transition of the TEND bit from “0” to “1.” This can be reported by a TEI interrupt.

Figure 8-13. Sample Flowchart for Serial Transmitting

In transmitting serial data, the SCI operates as follows.

1. The SCI monitors the TDRE bit in SSR. When TDRE is cleared to “0” the SCI recognizes that the transmit data register (TDR) contains new data, and loads this data from TDR into the transmit shift register (TSR).

2. After loading the data from TDR into TSR, the SCI sets the TDRE bit to “1” and starts transmitting. If the TIE bit (TDR-empty interrupt enable) in SCR is set to “1,” the SCI requests a TXI interrupt (TDR-empty interrupt) at this time.

   If clock output is selected the SCI outputs eight serial clock pulses, triggered by the clearing of the TDRE bit to “0.” If an external clock source is selected, the SCI outputs data in synchronization with the input clock.

   Data are output from the TxD pin in order from LSB (bit 0) to MSB (bit 7).

3. The SCI checks the TDRE bit when it outputs the MSB (bit 7). If TDRE is “0,” the SCI loads data from TDR into TSR, then begins serial transmission of the next frame. If TDRE is “1,” the SCI sets the TEND bit in SSR to “1,” transmits the MSB, then holds the output in the MSB state. If the TEIE bit (transmit-end interrupt enable) in SCR is set to “1,” a TEI interrupt (TSR-empty interrupt) is requested at this time.

4. After the end of serial transmission, the SCK pin is held at the high level.

Figure 8-14 shows an example of SCI transmit operation.

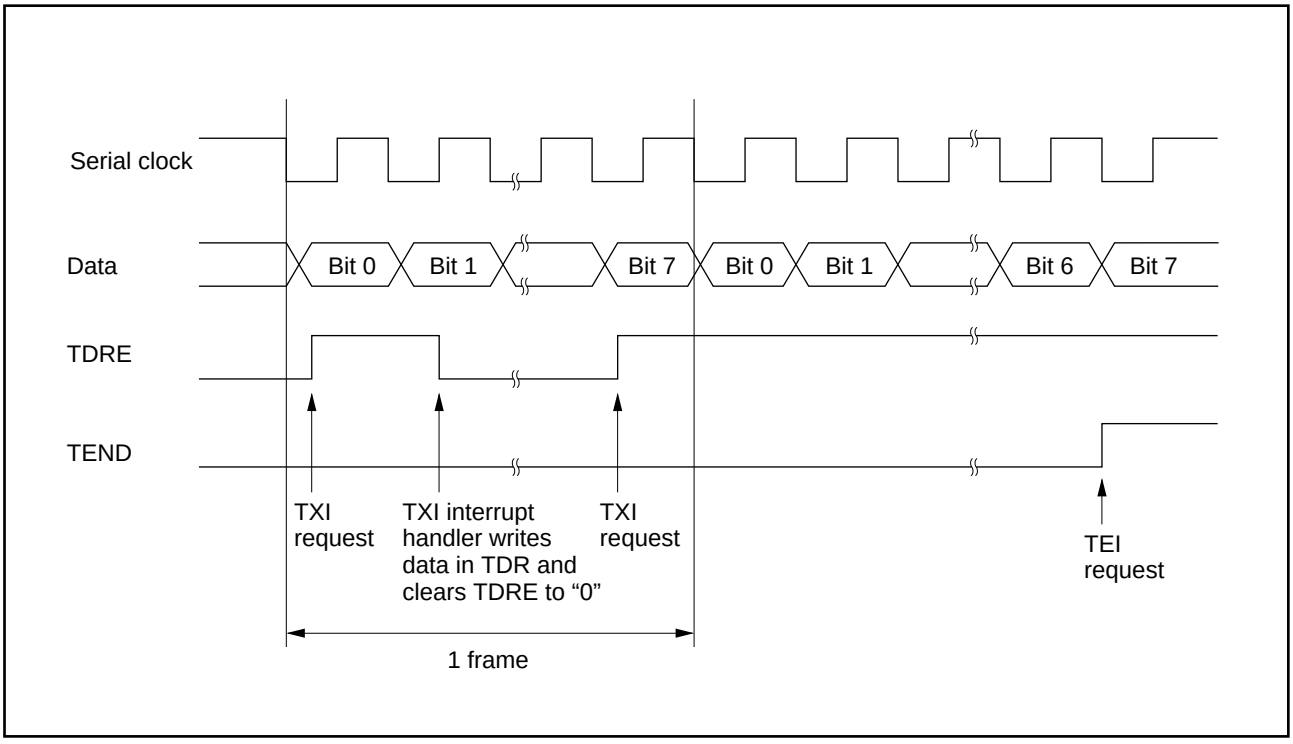

Figure 8-14. Example of SCI Transmit Operation

• **Receiving Serial Data:** Follow the procedure below for receiving serial data. When switching from asynchronous mode to clocked synchronous mode, be sure to check that PER and FER are cleared to "0." If PER or FER is set to "1" the RDRF bit will not be set and both transmitting and receiving will be disabled.

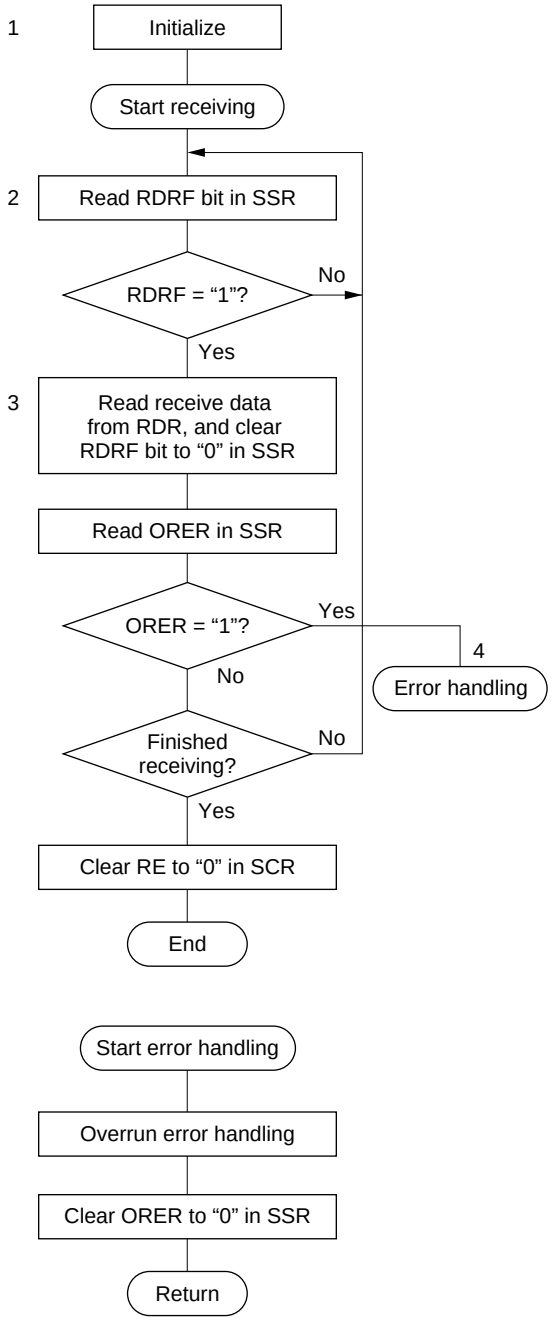

1. SCI initialization: the receive data function of the RxD pin is selected automatically.

2. SCI status check and receive data read: read the serial status register (SSR), check that RDRF is set to "1," then read receive data from the receive data register (RDR) and clear RDRF to "0." Transition of the RDRF bit from "0" to "1" can be reported by an RXI interrupt.

3. To continue receiving serial data: read RDR and clear RDRF to "0" before the MSB (bit 7) of the current frame is received.

4. Receive error handling: if a receive error occurs, read the ORER bit in SSR then, after executing the necessary error handling, clear ORER to "0." Neither transmitting nor receiving can resume while ORER remains set to "1." When clock output mode is selected, receiving can be halted temporarily by receiving one dummy byte and causing an overrun error. When preparations to receive the next data are completed, clear the ORER bit to "0." This causes receiving to resume, so return to the step marked 2 in the flowchart.

Figure 8-15. Sample Flowchart for Serial Receiving

In receiving, the SCI operates as follows.

1. If an external clock is selected, data are input in synchronization with the input clock. If clock output is selected, as soon as the RE bit is set to “1” the SCI begins outputting the serial clock and inputting data. If clock output is stopped because the ORER bit is set to “1,” output of the serial clock and input of data resume as soon as the ORER bit is cleared to “0.”

2. Receive data are shifted into RSR in order from LSB to MSB.

   After receiving the data, the SCI checks that RDRF is “0” so that receive data can be loaded from RSR into RDR. If this check passes, the SCI sets RDRF to “1” and stores the received data in RDR. If the check does not pass (receive error), the SCI operates as indicated in table 8-8.

Note: Both transmitting and receiving are disabled while a receive error flag is set. The RDRF bit is not set to “1.” Be sure to clear the error flag.

3. After setting RDRF to “1,” if the RIE bit (receive-end interrupt enable) is set to “1” in SCR, the SCI requests an RXI (receive-end) interrupt. If the ORER bit is set to “1” and the RIE bit in SCR is set to “1,” the SCI requests an ERI (receive-error) interrupt.

   When clock output mode is selected, clock output stops when the RE bit is cleared to “0” or the ORER bit is set to “1.” To prevent clock count errors, it is safest to receive one dummy byte and generate an overrun error.

Figure 8-16 shows an example of SCI receive operation.

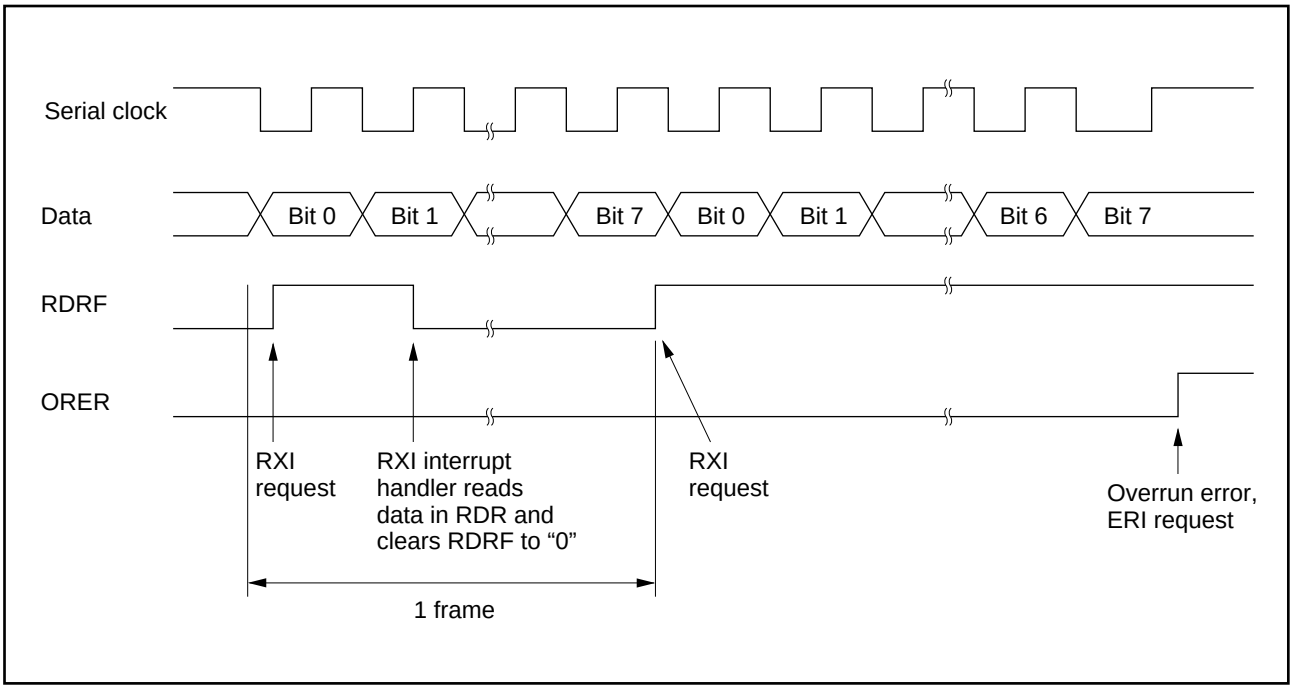

Figure 8-16. Example of SCI Receive Operation

• **Transmitting and Receiving Serial Data Simultaneously:** Follow the procedure below for transmitting and receiving serial data simultaneously. If clock output mode is selected, output of the serial clock begins simultaneously with serial transmission.

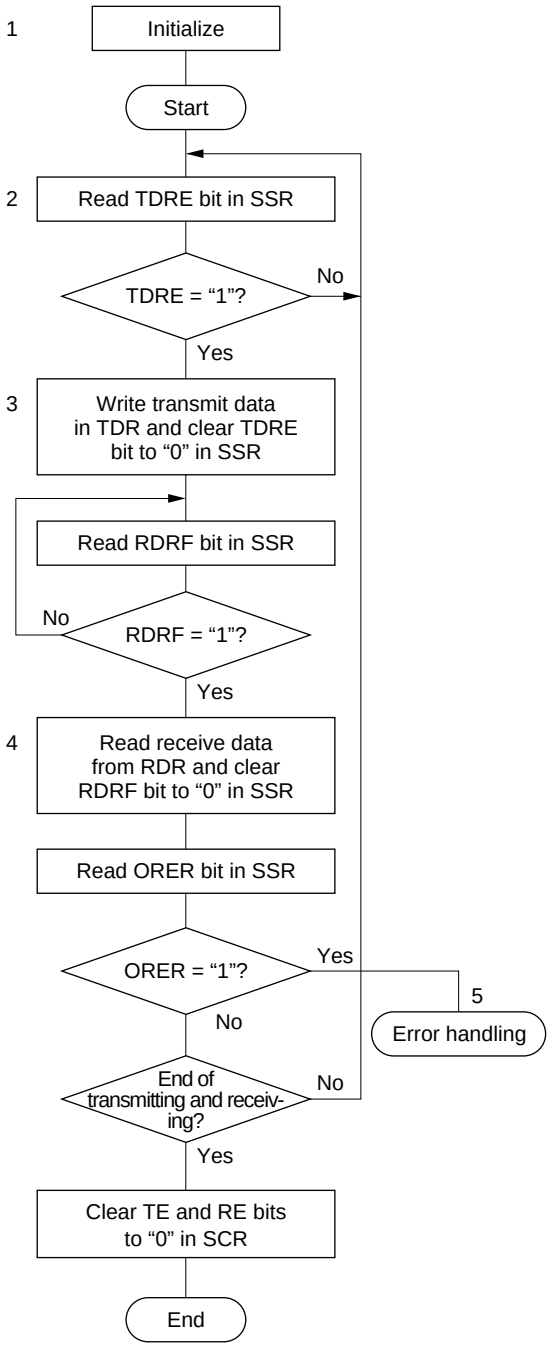

1. SCI initialization: the transmit data output function of the TxD pin and receive data input function of the RxD pin are selected, enabling simultaneous transmitting and receiving.

2. SCI status check and transmit data write: read the serial status register (SSR), check that the TDRE bit is “1,” then write transmit data in the transmit data register (TDR) and clear TDRE to “0.” Transition of the TDRE bit from “0” to “1” can be reported by a TXI interrupt.

3. SCI status check and receive data read: read the serial status register (SSR), check that the RDRF bit is “1,” then read receive data from the receive data register (RDR) and clear RDRF to “0.” Transition of the RDRF bit from “0” to “1” can be reported by an RXI interrupt.

4. To continue transmitting and receiving serial data: read RDR and clear RDRF to “0” before the MSB (bit 7) of the current frame is received. Also read the TDRE bit and check that it is set to “1,” indicating that it is safe to write; then write data in TDR and clear TDRE to “0” before the MSB (bit 7) of the current frame is transmitted.

5. Receive error handling: if a receive error occurs, read the ORER bit in SSR then, after executing the necessary error handling, clear ORER to “0.” Neither transmitting nor receiving can resume while ORER remains set to “1.”

Figure 8-17. Sample Flowchart for Serial Transmitting and Receiving

Note: In switching from transmitting or receiving to simultaneous transmitting and receiving, clear both TE and RE to “0,” then set both TE and RE to “1.”

8.4 SCI Interrupts

The SCI can request four types of interrupts: ERI, RXI, TXI, and TEI. Table 8-9 indicates the source and priority of these interrupts. The interrupt sources can be enabled or disabled by the TIE, RIE, and TEIE bits in the SCR. Independent signals are sent to the interrupt controller for each interrupt source, except that the receive-error interrupt (ERI) is the logical OR of three sources: overrun error, framing error, and parity error.

The TXI interrupt indicates that the next transmit data can be written. The TEI interrupt indicates that the SCI has stopped transmitting data.

Table 8-9. SCI Interrupt Sources

Interrupt	Description	Priority
ERI	Receive-error interrupt (ORER, FER, or PER)	High
RXI	Receive-end interrupt (RDRF)	↑
TXI	TDR-empty interrupt (TDRE)	
TEI	TSR-empty interrupt (TEND)	Low

8.5 Application Notes

Application programmers should note the following features of the SCI.

(1) TDR Write: The TDRE bit in the SSR is simply a flag that indicates that the TDR contents have been transferred to the TSR. The TDR contents can be rewritten regardless of the TDRE value. If a new byte is written in the TDR while the TDRE bit is “0,” before the old TDR contents have been moved into the TSR, the old byte will be lost. Software should check that the TDRE bit is set to “1” before writing to the TDR.

(2) Multiple Receive Errors: Table 8-10 lists the values of flag bits in the SSR when multiple receive errors occur, and indicates whether the RSR contents are transferred to the RDR.

Table 8-10. SSR Bit States and Data Transfer When Multiple Receive Errors Occur

	SSR bits				RSR →
Receive error	**RDRF**	**ORER**	**FER**	**PER**	**RDR*2**
Overrun error	1*1	1	0	0	No
Framing error	0	0	1	0	Yes
Parity error	0	0	0	1	Yes
Overrun and framing errors	1*1	1	1	0	No
Overrun and parity errors	1*1	1	0	1	No
Framing and parity errors	0	0	1	1	Yes
Overrun, framing, and parity errors	1*1	1	1	1	No

Notes: *1 Set to “1” before the overrun error occurs.
*2 Yes: The RSR contents are transferred to the RDR.
No: The RSR contents are not transferred to the RDR.

(3) Line Break Detection: When the RxD pin receives a continuous stream of 0’s in asynchronous mode (line-break state), a framing error occurs because the SCI detects a “0” stop bit. The value H'00 is transferred from the RSR to the RDR. Software can detect the line-break state as a framing error accompanied by H'00 data in the RDR.

The SCI continues to receive data, so if the FER bit is cleared to “0” another framing error will occur.

(4) Sampling Timing and Receive Margin in Asynchronous Mode: The serial clock used by the SCI in asynchronous mode runs at 16 times the baud rate. The falling edge of the start bit is detected by sampling the RxD input on the falling edge of this clock. After the start bit is detected, each bit of receive data in the frame (including the start bit, parity bit, and stop bit or bits) is sampled on the rising edge of the serial clock pulse at the center of the bit. See figure 8-18.

It follows that the receive margin can be calculated as in equation (1).

When the absolute frequency deviation of the clock signal is 0 and the clock duty factor is 0.5, data can theoretically be received with distortion up to the margin given by equation (2). This is a theoretical limit, however. In practice, system designers should allow a margin of 20% to 30%.

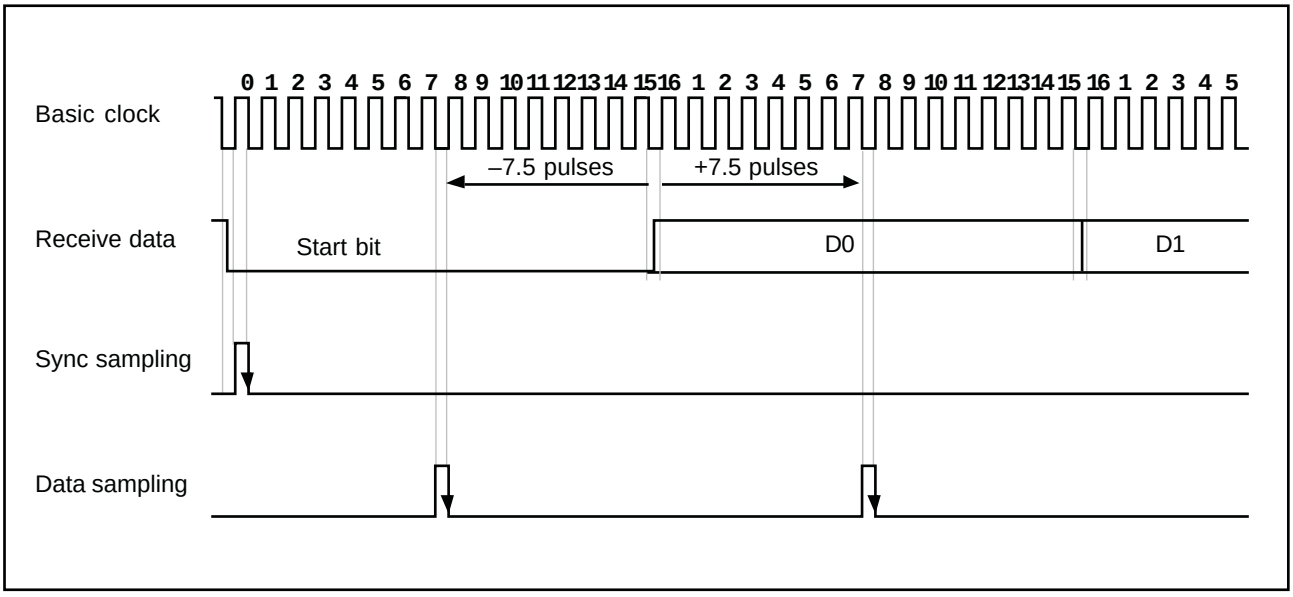

Figure 8-18. Sampling Timing (Asynchronous Mode)

$$M = \{(0.5 - 1/2N) - (D - 0.5)/N - (L - 0.5)F\} \times 100\ [\%] \qquad (1)$$

M: Receive margin
N: Ratio of basic clock to baud rate (N=16)
D: Duty factor of clock—ratio of High pulse width to Low width (0.5 to 1.0)
L: Frame length (9 to 12)
F: Absolute clock frequency deviation

When D = 0.5 and F = 0

$$M = (0.5 - 1/2 \times 16) \times 100\ [\%] = 46.875\% \qquad (2)$$

Section 9. A/D Converter

9.1 Overview

The H8/329 Series includes an analog-to-digital converter module with eight input channels. A/D conversion is performed by the successive approximations method with 8-bit resolution.

9.1.1 Features

The features of the on-chip A/D module are:

- 8-bit resolution
- Eight analog input channels
- Rapid conversion
  Conversion time is 12.2µs per channel (minimum) with a 10MHz system clock
- External triggering can be selected
- Single and scan modes
  — Single mode: A/D conversion is performed once.
  — Scan mode: A/D conversion is performed in a repeated cycle on one to four channels.
- Sample-and-hold function
- Four 8-bit data registers
  These registers store A/D conversion results for up to four channels.
- A CPU interrupt (ADI) can be requested at the completion of each A/D conversion cycle.

9.1.2 Block Diagram

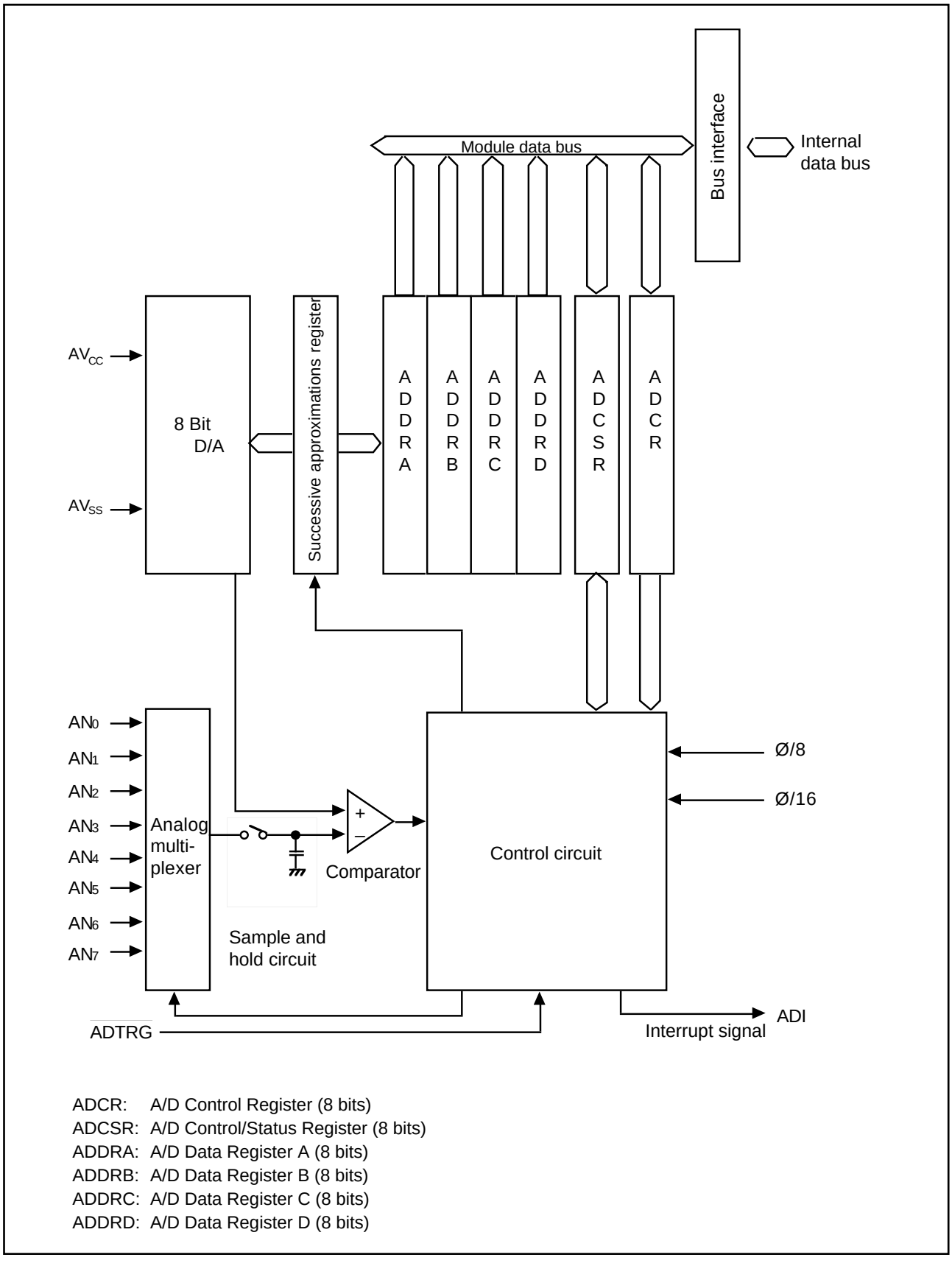

Figure 9-1. Block Diagram of A/D Converter

9.1.3 Input Pins

Table 9-1 lists the input pins used by the A/D converter module.

The eight analog input pins are divided into two groups, consisting of analog inputs 0 to 3 (AN_0 to AN_3) and analog inputs 4 to 7 (AN_4 to AN_7), respectively.

Table 9-1. A/D Input Pins

Name	Abbreviation	I/O	Function
Analog supply voltage	AV_{CC}	Input	Power supply and reference voltage for the analog circuits.
Analog ground	AV_{SS}	Input	Ground and reference voltage for the analog circuits.
Analog input 0	AN_0	Input	Analog input pins, group 0
Analog input 1	AN_1	Input	
Analog input 2	AN_2	Input	
Analog input 3	AN_3	Input	
Analog input 4	AN_4	Input	Analog input pins, group 1
Analog input 5	AN_5	Input	
Analog input 6	AN_6	Input	
Analog input 7	AN_7	Input	
A/D external trigger	$\overline{ADTRG}$	Input	External trigger for starting A/D conversion

9.1.4 Register Configuration

Table 9-2 lists the registers of the A/D converter module.

Table 9-2. A/D Registers

Name	Abbreviation	R/W	Initial value	Address
A/D data register A	ADDRA	R	H'00	H'FFE0
A/D data register B	ADDRB	R	H'00	H'FFE2
A/D data register C	ADDRC	R	H'00	H'FFE4
A/D data register D	ADDRD	R	H'00	H'FFE6
A/D control/status register	ADCSR	R/(W)*	H'00	H'FFE8
A/D control register	ADCR	R/W	H'7E	H'FFEA

Note: * Software can write a “0” to clear bit 7, but cannot write a “1” in this bit.

9.2 Register Descriptions

9.2.1 A/D Data Registers (ADDR)—H'FFE0 to H'FFE6

Bit	7	6	5	4	3	2	1	0
ADDRn								
Initial value	0	0	0	0	0	0	0	0
Read/Write	R	R	R	R	R	R	R	R

(n = A to D)

The four A/D data registers (ADDRA to ADDRD) are 8-bit read-only registers that store the results of A/D conversion. Each data register is assigned to two analog input channels as indicated in table 9-3.

The A/D data registers are always readable by the CPU.

The A/D data registers are initialized to H'00 at a reset and in the standby modes.

Table 9-3. Assignment of Data Registers to Analog Input Channels

Analog input channel		
Group 0	**Group 1**	**A/D data register**
AN_0	AN_4	ADDRA
AN_1	AN_5	ADDRB
AN_2	AN_6	ADDRC
AN_3	AN_7	ADDRD

9.2.2 A/D Control/Status Register (ADCSR)—H'FFE8

Bit	7	6	5	4	3	2	1	0
	ADF	ADIE	ADST	SCAN	CKS	CH2	CH1	CH0
Initial value	0	0	0	0	0	0	0	0
Read/Write	R/(W)*	R/W	R/W	R/W	R/W	R/W	R/W	R/W

Note: * Software can write a “0” in bit 7 to clear the flag, but cannot write a “1” in this bit.

The A/D control/status register (ADCSR) is an 8-bit readable/writable register that controls the operation of the A/D converter module.

The ADCSR is initialized to H'00 at a reset and in the standby modes.

Bit 7—A/D End Flag (ADF): This status flag indicates the end of one cycle of A/D conversion.

Bit 7

ADF	**Description**	
0	To clear ADF, the CPU must read ADF after it has been set to “1,” then write a “0” in this bit.	(Initial value)
1	This bit is set to 1 at the following times: (1) Single mode: when one A/D conversion is completed. (2) Scan mode: when inputs on all selected channels have been converted.	

Bit 6—A/D Interrupt Enable (ADIE): This bit selects whether to request an A/D interrupt (ADI) when A/D conversion is completed.

Bit 6

ADIE	**Description**	
0	The A/D interrupt request (ADI) is disabled.	(Initial value)
1	The A/D interrupt request (ADI) is enabled.	

Bit 5—A/D Start (ADST): The A/D converter operates while this bit is set to “1.” This bit can be set to “1” by the external trigger signal $\overline{\text{ADTRG}}$.

Bit 5

ADST	**Description**	
0	A/D conversion is halted.	(Initial value)
1	(1) Single mode: One A/D conversion is performed. The ADST bit is automatically cleared to “0” at the end of the conversion. (2) Scan mode: A/D conversion starts and continues cyclically on the selected channels until the ADST bit is cleared to “0” by software (or a reset, or by entry to a standby mode).	

Bit 4—Scan Mode (SCAN): This bit selects the scan mode or single mode of operation. See section 9.3, “Operation” for descriptions of these modes.
The mode should be changed only when the ADST bit is cleared to “0.”

Bit 4

SCAN	Description	
0	Single mode	(Initial value)
1	Scan mode	

Bit 3—Clock Select (CKS): This bit controls the A/D conversion time.

The conversion time should be changed only when the ADST bit is cleared to “0.”

Bit 3

CKS	Description	
0	Conversion time = 242 states (max)	(Initial value)
1	Conversion time = 122 states (max)	

Bits 2 to 0—Channel Select 2 to 0 (CH2 to CH0): These bits and the SCAN bit combine to select one or more analog input channels.

The channel selection should be changed only when the ADST bit is cleared to “0.”

Group select	Channel select		Selected channels	
CH2	CH1	CH0	Single mode	Scan mode
0	0	0	AN_0 (Initial value)	AN_0
	0	1	AN_1	AN_0, AN_1
	1	0	AN_2	AN_0 to AN_2
	1	1	AN_3	AN_0 to AN_3
1	0	0	AN_4	AN_4
	0	1	AN_5	AN_4, AN_5
	1	0	AN_6	AN_4 to AN_6
	1	1	AN_7	AN_4 to AN_7

9.2.3 A/D Control Register (ADCR)—H'FFEA

Bit	7	6	5	4	3	2	1	0
	TRGE	—	—	—	—	—	—	CHS
Initial value	0	1	1	1	1	1	1	0
Read/Write	R/W	—	—	—	—	—	—	R/W

The A/D control register (ADCR) is an 8-bit readable/writable register that enables or disables the A/D external trigger signal.

The ADCR is initialized to H'7E at a reset and in the standby modes.

Bit 7—Trigger Enable (TRGE): This bit enables the $\overline{\text{ADTRG}}$ (A/D external trigger) signal to set the ADST bit and start A/D conversion.

Bit 7

TRGE	**Description**	
0	A/D external trigger is disabled. $\overline{\text{ADTRG}}$ does not set the ADST bit.	(Initial value)
1	A/D external trigger is enabled. $\overline{\text{ADTRG}}$ sets the ADST bit. (The ADST bit can also be set by software.)	

Bits 6 to 1—Reserved: These bits cannot be modified and are always read as “1.”

Bit 0—Channel Set Select (CHS): This bit is reserved. It does not affect the operation of the chip.

9.3 Operation

The A/D converter performs 8 successive approximations to obtain a result ranging from H'00 (corresponding to AV_{SS}) to H'FF (corresponding to AV_{CC}).

The A/D converter module can be programmed to operate in single mode or scan mode as explained below.

9.3.1 Single Mode (SCAN = 0)

The single mode is suitable for obtaining a single data value from a single channel. A/D conversion starts when the ADST bit is set to “1,” either by software or by a High-to-Low transition of the $\overline{\text{ADTRG}}$ signal (if enabled). During the conversion process the ADST bit remains set to “1.” When conversion is completed, the ADST bit is automatically cleared to “0.”

When the conversion is completed, the ADF bit is set to “1.” If the interrupt enable bit (ADIE) is also set to “1,” an A/D conversion end interrupt (ADI) is requested, so that the converted data can be processed by an interrupt-handling routine. The ADF bit is cleared when software reads the A/D control/status register (ADCSR), then writes a “0” in this bit.

Before selecting the single mode, clock, and analog input channel, software should clear the ADST bit to “0” to make sure the A/D converter is stopped. Changing the mode, clock, or channel selection while A/D conversion is in progress can lead to conversion errors. A/D conversion begins when the ADST bit is set to “1” again. The same instruction can be used to alter the mode and channel selection and set ADST to “1.”

The following example explains the A/D conversion process in single mode when channel 1 (AN1) is selected and the external trigger is disabled. Figure 9-2 shows the corresponding timing chart.

(1) Software clears the ADST bit to “0,” then selects the single mode (SCAN = “0”) and channel 1 (CH2 to CH0 = “001”), enables the A/D interrupt request (ADIE = “1”), and sets the ADST bit to “1” to start A/D conversion.

Coding Example: (when using the slow clock, CKS = “0”)

```
BCLR #5, @H'FFE8     ;Clear ADST
MOV.B #H'7F, ROL
MOV.B ROL, @H'FFEA ;Disable external trigger
MOV.B #H'61, ROL
MOV.B ROL, @H'FFE8 ;Select mode and channel and set ADST to “1”
```

Value set in ADCSR:

ADF	ADIE	ADST	SCAN	CKS	CH2	CH1	CH0
0	1	1	0	0	0	0	1

(2) The A/D converter converts the voltage level at the AN_1 input pin to a digital value. At the end of the conversion process the A/D converter transfers the result to register ADDRB, sets the ADF bit to “1,” clears the ADST bit to “0,” and halts.

(3) ADF = “1” and ADIE = “1,” so an A/D interrupt is requested.

(4) The user-coded A/D interrupt-handling routine is started.

(5) The interrupt-handling routine reads the ADCSR value, then writes a “0” in the ADF bit to clear this bit to “0.”

(6) The interrupt-handling routine reads ADDRB and processes the A/D conversion result.

(7) The routine ends.

Steps (2) to (7) can now be repeated by setting the ADST bit to “1” again.

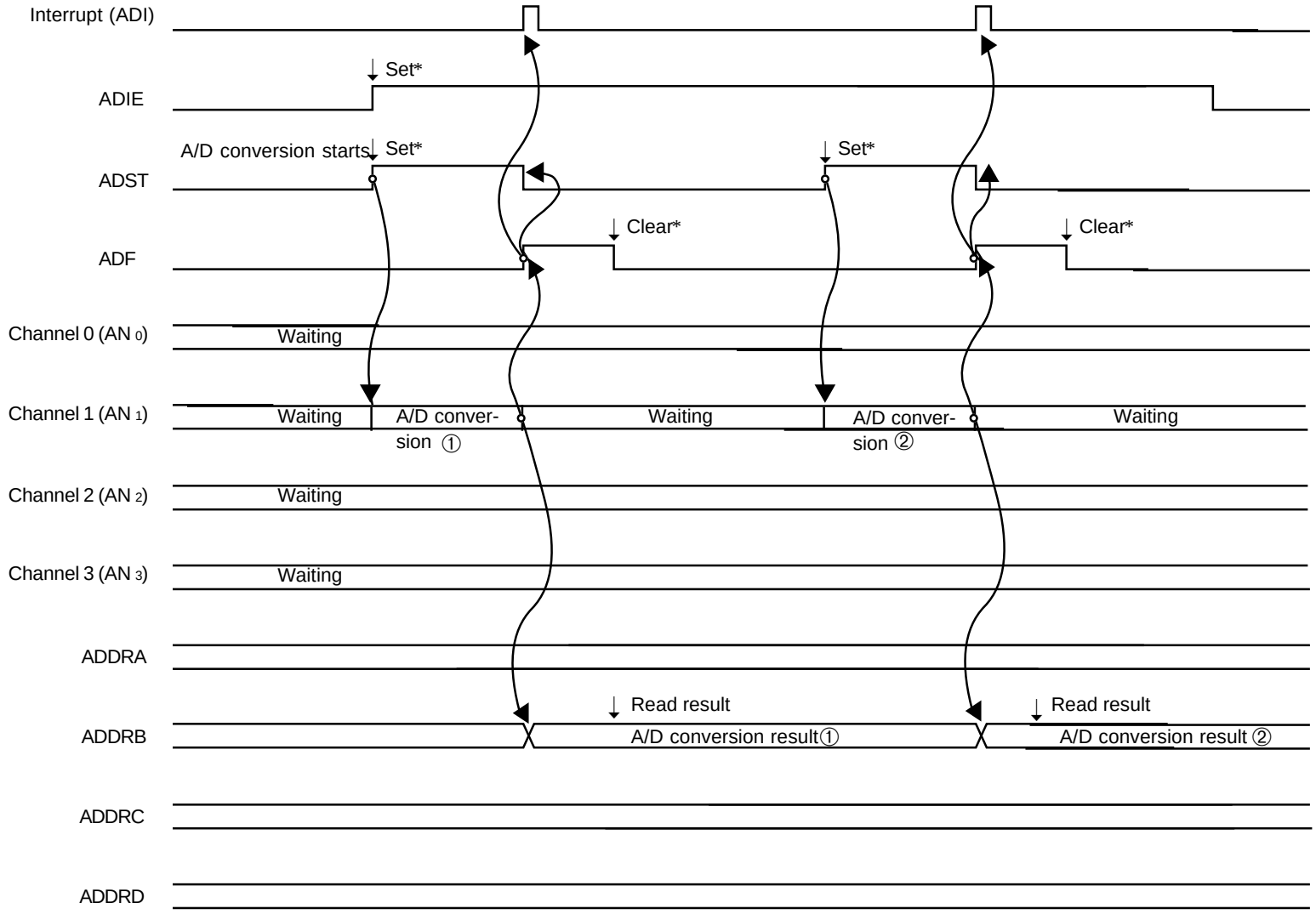

Note: *↓ indicates execution of a software instruction

Figure 9-2. A/D Operation in Single Mode (when Channel 1 is Selected)

9.3.2 Scan Mode (SCAN = 1)

The scan mode can be used to monitor analog inputs on one or more channels. When the ADST bit is set to “1,” either by software or by a High-to-Low transition of the ADTRG signal (if enabled), A/D conversion starts from the first channel selected by the CH bits. When CH2 = “0” the first channel is AN_0. When CH2 = “1” the first channel is AN_4.

If the scan group includes more than one channel (i.e., if bit CH1 or CH0 is set), conversion of the next channel (AN_1 or AN_5)begins as soon as conversion of the first channel ends.

Conversion of the selected channels continues cyclically until the ADST bit is cleared to “0.” The conversion results are placed in the data registers corresponding to the selected channels. The A/D data registers are readable by the CPU.

Before selecting the scan mode, clock, and analog input channels, software should clear the ADST bit to “0” to make sure the A/D converter is stopped. Changing the mode, clock, or channel selection while A/D conversion is in progress can lead to conversion errors. A/D conversion begins from the first selected channel when the ADST bit is set to “1” again. The same instruction can be used to alter the mode and channel selection and set ADST to “1.”

The following example explains the A/D conversion process when three channels in group 0 are selected (AN_0, AN_1, and AN_2) and the external trigger is disabled. Figure 9-3 shows the corresponding timing chart.

(1) Software clears the ADST bit to “0,” then selects the scan mode (SCAN = “1”), scan group 0 (CH2 = “0”), and analog input channels AN_0 to AN_2 (CH1 = “1”, CH0 = “0”) and sets the ADST bit to “1” to start A/D conversion.

Coding Example: (with slow clock and ADI interrupt enabled)

```
BCLR #5, @H'FFE8     ;Clear ADST
MOV.B #H'7F, ROL
MOV.B ROL, @H'FFEA ;Disable external trigger
MOV.B #H'72, ROL
MOV.B ROL, @H'FFE8 ;Select mode and channels and set ADST to “1”
```

Value set in ADCSR

ADF	ADIE	ADST	SCAN	CKS	CH2	CH1	CH0
0	1	1	1	0	0	1	0

(2) The A/D converter converts the voltage level at the AN_0 input pin to a digital value, and transfers the result to register ADDRA.

(3) Next the A/D converter converts AN_1 and transfers the result to ADDRB. Then it converts AN_2 and transfers the result to ADDRC.

(4) After all selected channels (AN_0 to AN_2) have been converted, the AD converter sets the ADF bit to “1.” If the ADIE bit is set to “1,” an A/D interrupt (ADI) is requested. Then the A/D converter begins converting AN_0 again.

(5) Steps (2) to (4) are repeated cyclically as long as the ADST bit remains set to “1.”

To stop the A/D converter, software must clear the ADST bit to “0.”

Regardless of which channel is being converted when the ADST bit is cleared to “0,” when the ADST bit is set to “1” again, conversion begins from the the first selected channel (AN_0).

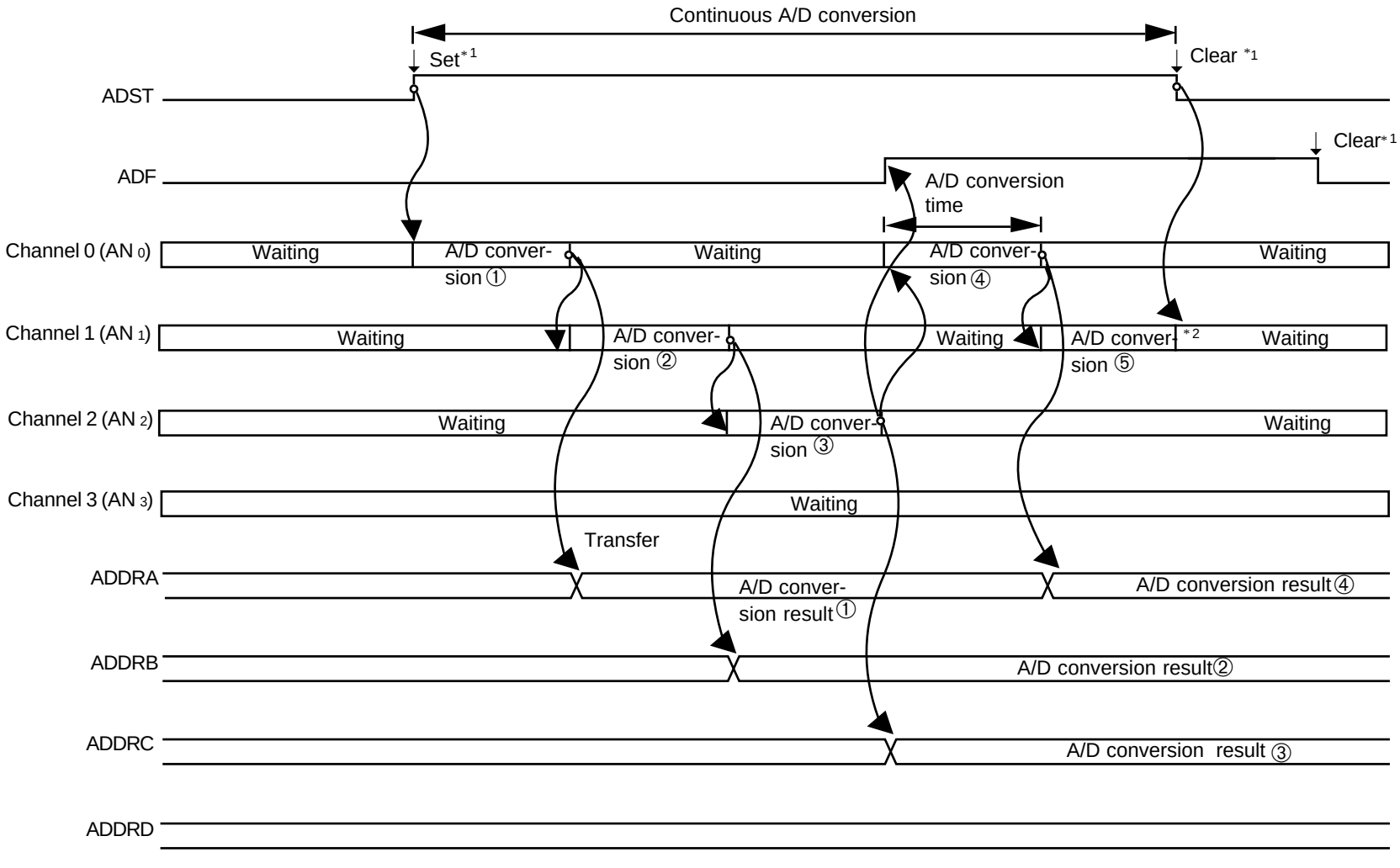

Notes: *1↓ indicates execution of a software instruction
*2 Data undergoing conversion when ADST bit is cleared are ignored.

Figure 9-3. A/D Operation in Scan Mode (when Channels 0 to 2 are Selected)

9.3.3 Input Sampling Time and A/D Conversion Time

The A/D converter includes a built-in sample-and-hold circuit. Sampling of the input starts at a time t_D after the ADST bit is set to "1." The sampling process lasts for a time t_{SPL}. The actual A/D conversion begins after sampling is completed. Figure 9-4 shows the timing of these steps.
Table 9-4 (a) lists the conversion times for the single mode. Table 9-4 (b) lists the conversion times for the scan mode.

The total conversion time (t_{CONV}) includes t_D and t_{SPL}. The purpose of t_D is to synchronize the ADCSR write time with the A/D conversion process, so the length of t_D is variable. The total conversion time therefore varies within the minimum to maximum ranges indicated in table 9-4 (a) and (b).

In the scan mode, the ranges given in table 9-4 (b) apply to the first conversion. The length of the second and subsequent conversion processes is fixed at 256 states (when CKS = "0") or 128 states (when CKS = "1").

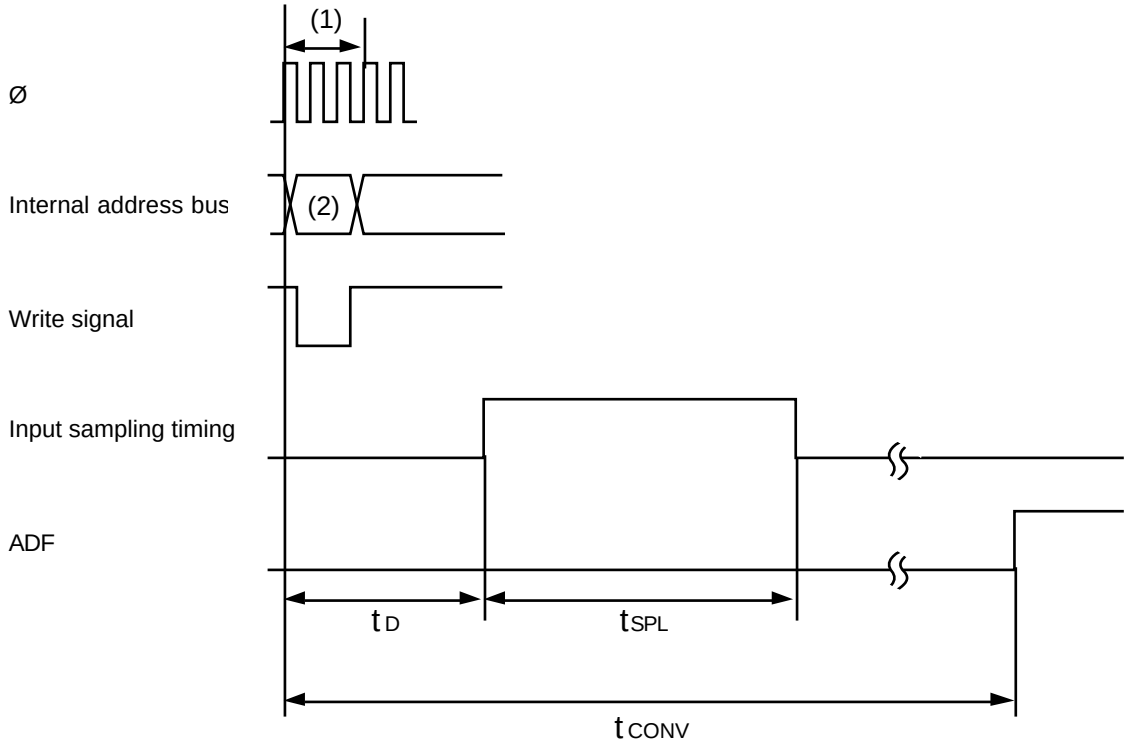

(1): ADCSR write cycle
(2): ADCSR address
t_D: Synchronization delay
t_{SPL}: Input sampling time
t_{CONV}: Total A/D conversion time

Figure 9-4. A/D Conversion Timing

Table 9-4 (a). A/D Conversion Time (Single Mode)

		CKS = "0"			CKS = "1"		
Item	**Symbol**	**Min**	**Typ**	**Max**	**Min**	**Typ**	**Max**
Synchronization delay	t_D	18	—	33	10	—	17
Input sampling time	t_{SPL}	—	63	—	—	31	—
Total A/D conversion time	t_{CONV}	227	—	242	115	—	122

Table 9-4 (b). A/D Conversion Time (Scan Mode)

		CKS = "0"			CKS = "1"		
Item	**Symbol**	**Min**	**Typ**	**Max**	**Min**	**Typ**	**Max**
Synchronization delay	t_D	18	—	33	10	—	17
Input sampling time	t_{SPL}	—	63	—	—	31	—
Total A/D conversion time	t_{CONV}	259	—	274	131	—	138

Note: Values in the tables above are numbers of states.

9.3.4 External Trigger Input Timing

A/D conversion can be started by external trigger input at the $\overline{\text{ADTRG}}$ pin. This input is enabled or disabled by the TRGE bit in the A/D control register (ADCR). If the TRGE bit is set to "1," when a falling edge of $\overline{\text{ADTRG}}$ is detected the ADST bit is set to "1" and A/D conversion begins. Subsequent operation in both single and scan modes is the same as when the ADST bit is set to "1" by software.

Figure 9-5 shows the trigger timing.

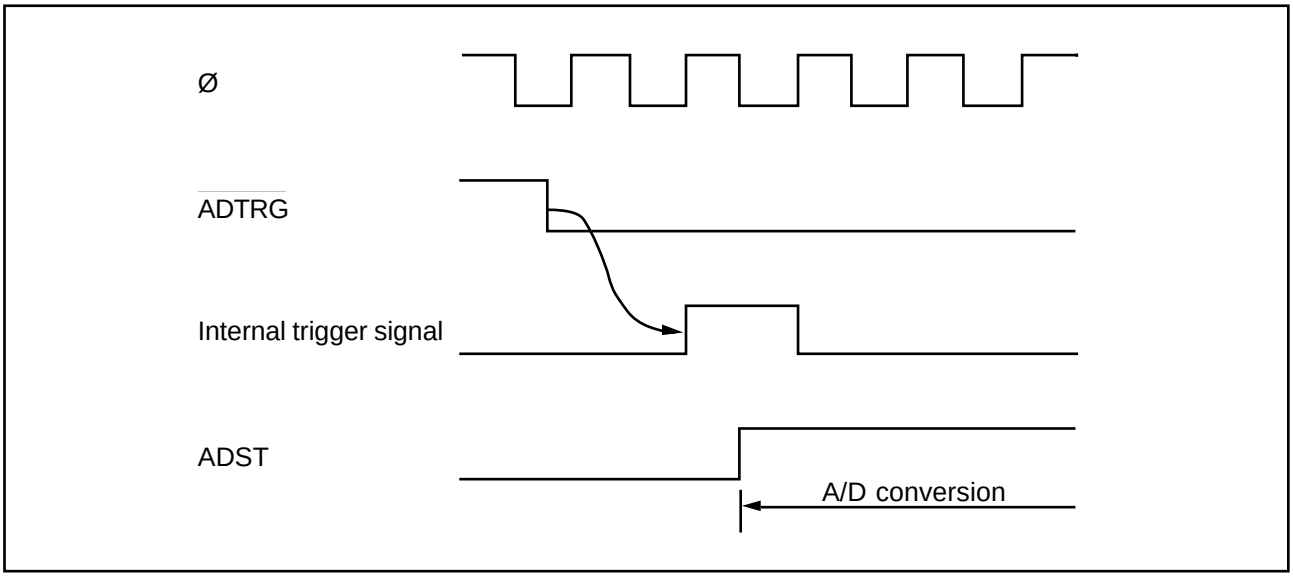

Figure 9-5. External Trigger Input Timing

9.4 Interrupts

The A/D conversion module generates an A/D-end interrupt request (ADI) at the end of A/D conversion.

The ADI interrupt request can be enabled or disabled by the ADIE bit in the A/D control/status register (ADCSR).

Section 10. RAM

10.1 Overview

The H8/329 and H8/328 include 1k byte of on-chip static RAM. The H8/327 has 512 bytes. The H8/326 has 256 bytes. The on-chip RAM is connected to the CPU by a 16-bit data bus. Both byte and word access to the on-chip RAM are performed in two states, enabling rapid data transfer and instruction execution.

The on-chip RAM is assigned to addresses H'FB80 to H'FF7F in the H8/329 and H8/328, addresses H'FD80 to H'FF7F in the H8/327, and addresses H'FE80 to H'FF7F in the H8/326. The RAME bit in the system control register (SYSCR) can enable or disable the on-chip RAM, permitting these addresses to be allocated to external memory instead, if so desired.

10.2 Block Diagram

Figure 10-1 is a block diagram of the on-chip RAM.

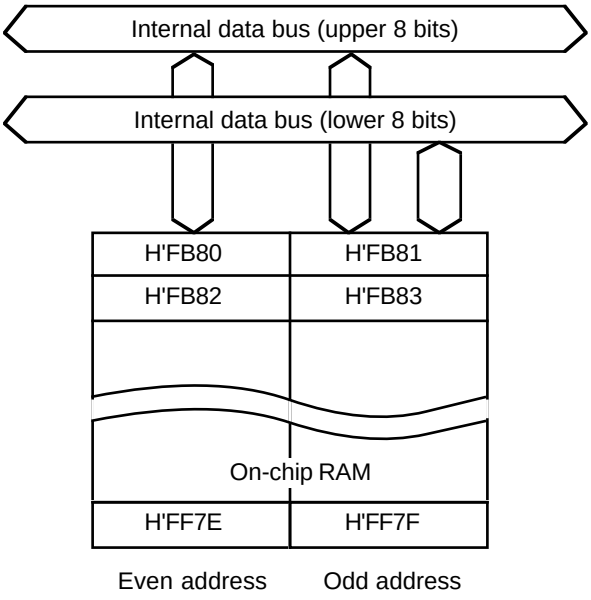

Figure 10-1. Block Diagram of On-Chip RAM (H8/329 and H8/328)

10.3 RAM Enable Bit (RAME) in System Control Register (SYSCR)

The on-chip RAM is enabled or disabled by the RAME (RAM Enable) bit in the system control register (SYSCR).

Bit	7	6	5	4	3	2	1	0
	SSBY	STS2	STS1	STS0	—	NMIEG	—	RAME
Initial value	0	0	0	0	1	0	1	1
Read/Write	R/W	R/W	R/W	R/W	—	R/W	—	R/W

The only bit in the system control register that concerns the on-chip RAM is the RAME bit. See section 2.2, “System Control Register” for the other bits.

Bit 0—RAM Enable (RAME): This bit enables or disables the on-chip RAM.

The RAME bit is initialized to “1” on the rising edge of the $\overline{\text{RES}}$ signal, so a reset enables the on-chip RAM. The RAME bit is not initialized in the software standby mode.

Bit 7

RAME	Description	
0	On-chip RAM is disabled.	
1	On-chip RAM is enabled.	(Initial value)

10.4 Operation

10.4.1 Expanded Modes (Modes 1 and 2)

If the RAME bit is set to “1,” accesses to addresses H'FB80 to H'FF7F in the H8/329 and H8/328, addresses H'FD80 to H'FF7F in the H8/327, and addresses H'FE80 to H'FF7F in the H8/326 are directed to the on-chip RAM. If the RAME bit is cleared to “0,” accesses to these addresses are directed to the external data bus.

10.4.2 Single-Chip Mode (Mode 3)

If the RAME bit is set to “1,” accesses to addresses H'FB80 to H'FF7F in the H8/329 and H8/328, addresses H'FD80 to H'FF7F in the H8/327, and addresses H'FE80 to H'FF7F in the H8/326 are directed to the on-chip RAM.

If the RAME bit is cleared to “0,” the on-chip RAM data cannot be accessed. Attempted write access has no effect. Attempted read access always results in H'FF data being read.

Section 11. ROM

11.1 Overview

The H8/329 includes 32k bytes of high-speed, on-chip ROM. The H8/328 has 24k bytes. The H8/327 has 16k bytes. The H8/326 has 8k bytes. The on-chip ROM is connected to the CPU via a 16-bit data bus. Both byte data and word data are accessed in two states, enabling rapid data transfer and instruction fetching.

The H8/329 and H8/327 are available with electrically programmable ROM (PROM). The PROM version has a PROM mode in which the chip can be programmed with a standard PROM writer.

The on-chip ROM is enabled or disabled depending on the MCU operating mode, which is determined by the inputs at the mode pins (MD_1 and MD_0). See table 11-1.

Table 11-1. On-Chip ROM Usage in Each MCU Mode

	Mode pins		
Mode	**MD_1**	**MD_0**	**On-Chip ROM**
Mode 1 (expanded mode)	0	1	Disabled (external addresses)
Mode 2 (expanded mode)	1	0	Enabled
Mode 3 (single-chip mode)	1	1	Enabled

11.1.1 Block Diagram

Figure 11-1 is a block diagram of the on-chip ROM.

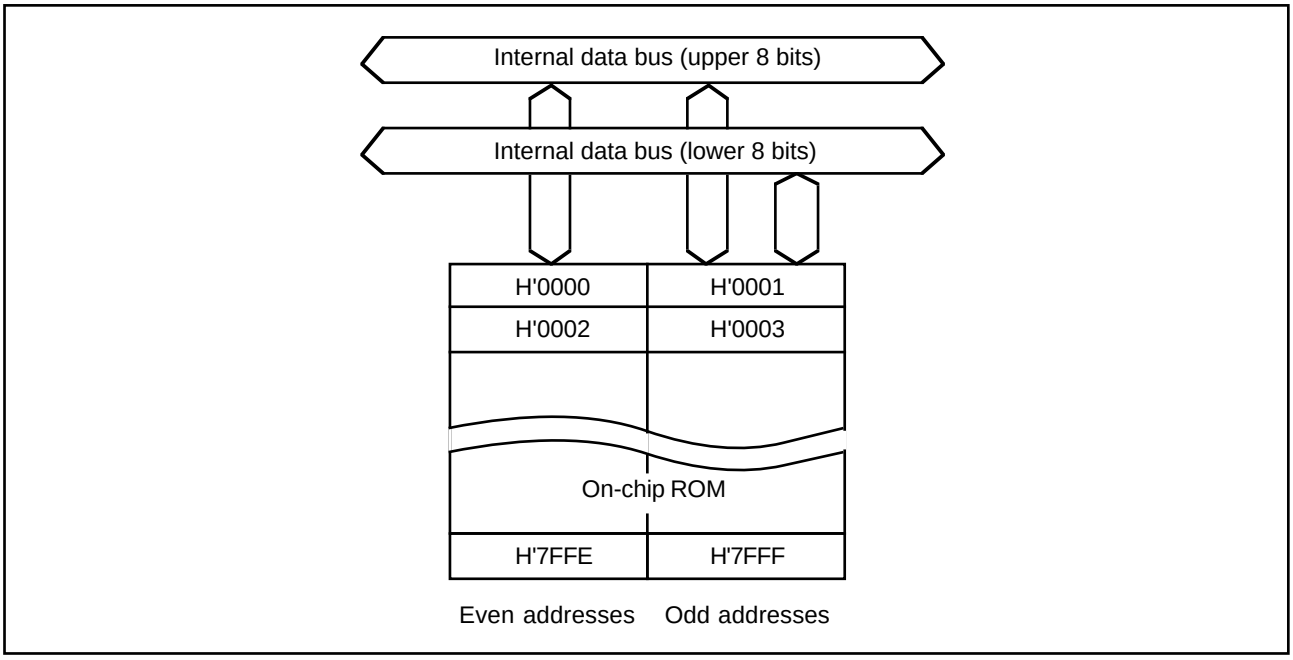

Figure 11-1. Block Diagram of On-Chip ROM (H8/329)

11.2 PROM Mode (H8/329, H8/327)

11.2.1 PROM Mode Setup

In the PROM mode of the PROM version of the H8/329 and H8/327, the usual microcomputer functions are halted to allow the on-chip PROM to be programmed. The programming method is the same as for the HN27C256.

To select the PROM mode, apply the signal inputs listed in table 11-2.

Table 11-2. Selection of PROM Mode

Pin	Input
Mode pin MD_1	Low
Mode pin MD_0	Low
$\overline{STBY}$ pin	Low
Pins $P6_3$ and $P6_4$	High

11.2.2 Socket Adapter Pin Assignments and Memory Map

The H8/329 and H8/327 can be programmed with a general-purpose PROM writer. Since the package has more than 32 pins, a socket adapter is necessary. Table 11-3 lists recommended socket adapters. Figure 11-2 shows the socket adapter pin assignments by giving the correspondence between H8/329 or H8/327 pins and HN27C256 pin functions. The same socket adapter can be used for both the H8/329 and H8/327.

Figures 11-3 and 11-4 show memory maps in the PROM mode. Since the H8/329 has only 32k bytes of on-chip PROM, its address range should be specified as H'0000 to H'7FFF. Since the H8/327 has only 16k bytes of on-chip PROM, its address range should be specified as H'0000 to H'3FFF. H'FF data should be specified for unused address areas.

It is important to limit the program address range to H'0000 to H'7FFF for the H8/329, and to H'0000 to H'3FFF for the H8/327, and specify H'FF data for H'8000 or H'4000 and higher addresses. If data (other than H'FF) are written by mistake in addresses equal to or greater than H'8000 in the H8/329, or H'4000 in the H8/327, it may become impossible to program or verify the PROM data. With a windowed package, it is possible to erase the data and reprogram, but this cannot be done with a plastic package, so particular care is required.

Table 11-3. Recommended Socket Adapters

Package	Recommended socket adapter
64-pin windowed shrink DIP (DC-64S)	HS328ESS02H
64-pin shrink DIP (DP-64S)	
64-pin QFP (FP-64A)	HS328ESH02H
68-pin PLCC (DP-68)	HS328ESC02H

H8/329 or H8/327

CP-68	FP-64A	DC-64S DP-64S	Pin
13	4	12	$\overline{RES}$
14	5	13	$\overline{NMI}$
61	49	57	$P3_0$
62	50	58	$P3_1$
63	51	59	$P3_2$
64	52	60	$P3_3$
65	53	61	$P3_4$
66	54	62	$P3_5$
67	55	63	$P3_6$
68	56	64	$P3_7$
60	48	56	$P1_0$
59	47	55	$P1_1$
58	46	54	$P1_2$
57	45	53	$P1_3$
56	44	52	$P1_4$
55	43	51	$P1_5$
54	42	50	$P1_6$
53	41	49	$P1_7$
50	39	47	$P2_0$
49	38	46	$P2_1$
48	37	45	$P2_2$
47	36	44	$P2_3$
46	35	43	$P2_4$
45	34	42	$P2_5$
44	33	41	$P2_6$
43	32	40	$P2_7$
37	26	34	$P6_3$
38	27	35	$P6_4$
32	22	30	AV_{CC}
15	8	14	V_{CC}
42	31	39	V_{CC}
22	12	20	MD_0
21	11	19	MD_1
16	7	15	$\overline{STBY}$
23	13	21	AV_{SS}
17	8	16	V_{SS}
51	40	48	V_{SS}
1	—	—	V_{SS}
18	—	—	V_{SS}
35	—	—	V_{SS}
52	—	—	V_{SS}

EPROM Socket

Pin	HN27C256 (28 pins)
V_{PP}	1
EA_9	24
EO_0	11
EO_1	12
EO_2	13
EO_3	15
EO_4	16
EO_5	17
EO_6	18
EO_7	19
EA_0	10
EA_1	9
EA_2	8
EA_3	7
EA_4	6
EA_5	5
EA_6	4
EA_7	3
EA_8	25
$\overline{OE}$	22
EA_{10}	21
EA_{11}	23
EA_{12}	2
EA_{13}	26
EA_{14}	27
$\overline{CE}$	20
V_{CC}	28
V_{SS}	14

V_{PP}: Program voltage (12.5 V)
EO_7 to EO_0: Data input/output
EA_{14} to EA_0: Address input
$\overline{OE}$: Output enable
$\overline{CE}$: Chip enable

Note: All pins not listed in this figure should be left open.

Figure 11-2. Socket Adapter Pin Assignments

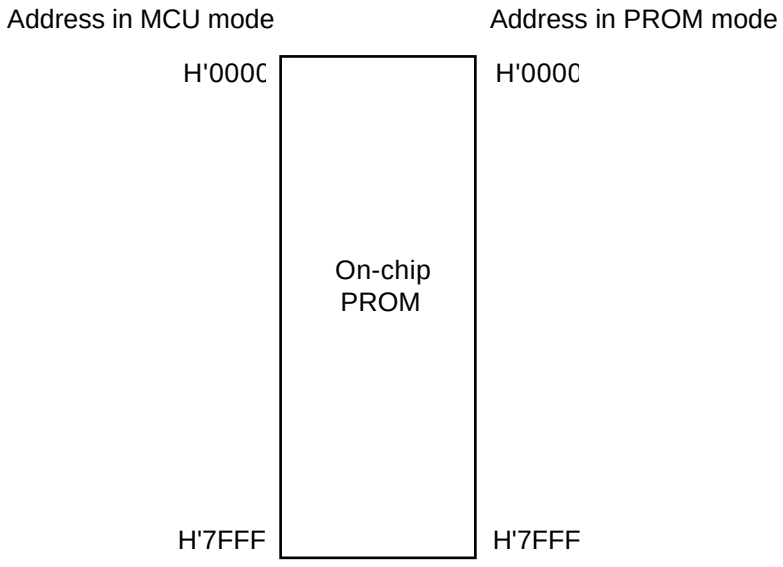

Figure 11-3. Memory Map of H8/329 in PROM Mode

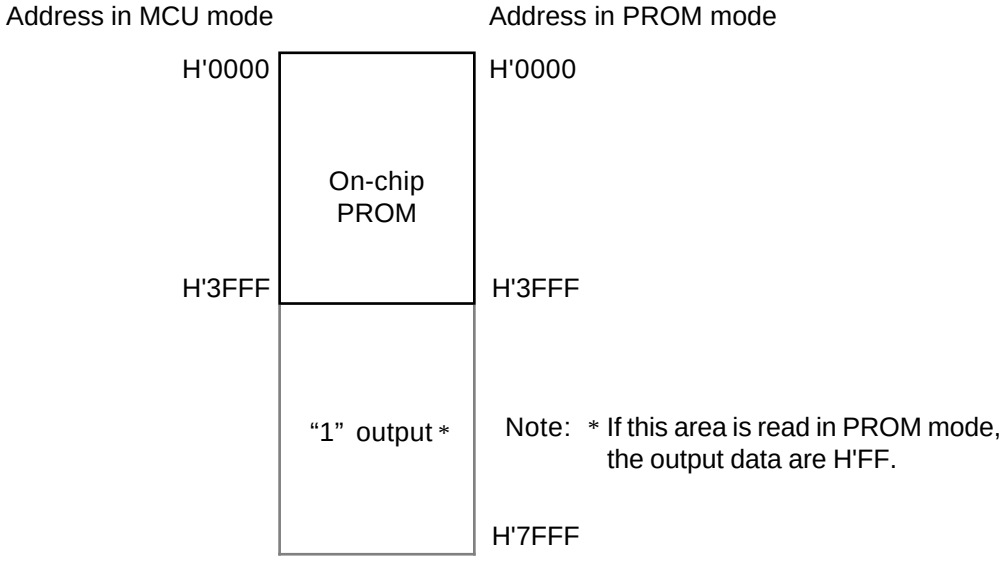

Figure 11-4. Memory Map of H8/327 in PROM Mode

11.3 Programming

The write, verify, and other sub-modes of the PROM mode are selected as shown in table 11-4.

Table 11-4. Selection of Sub-Modes in PROM Mode

Sub-Mode	$\overline{CE}$	$\overline{OE}$	V_{PP}	V_{CC}	EO_7 to EO_0	EA_{14} to EA_0
Write	Low	High	V_{PP}	V_{CC}	Data input	Address input
Verify	High	Low	V_{PP}	V_{CC}	Data output	Address input
Programming inhibited	High	High	V_{PP}	V_{CC}	High impedance	Address input

Note: The V_{PP} and V_{CC} pins must be held at the V_{PP} and V_{CC} voltage levels.

The H8/329 and H8/327 PROM has the same standard read/write specifications as the HN27C256 and HN27256 EPROM.

11.3.1 Writing and Verifying

An efficient, high-speed programming procedure can be used to write and verify PROM data. This procedure writes data quickly without subjecting the chip to voltage stress and without sacrificing data reliability. It leaves the data H'FF written in unused addresses. Figure 11-5 shows the basic high-speed programming flowchart. Tables 11-5 and 11-6 list the electrical characteristics of the chip in the PROM mode. Figure 11-6 shows a write/verify timing chart.

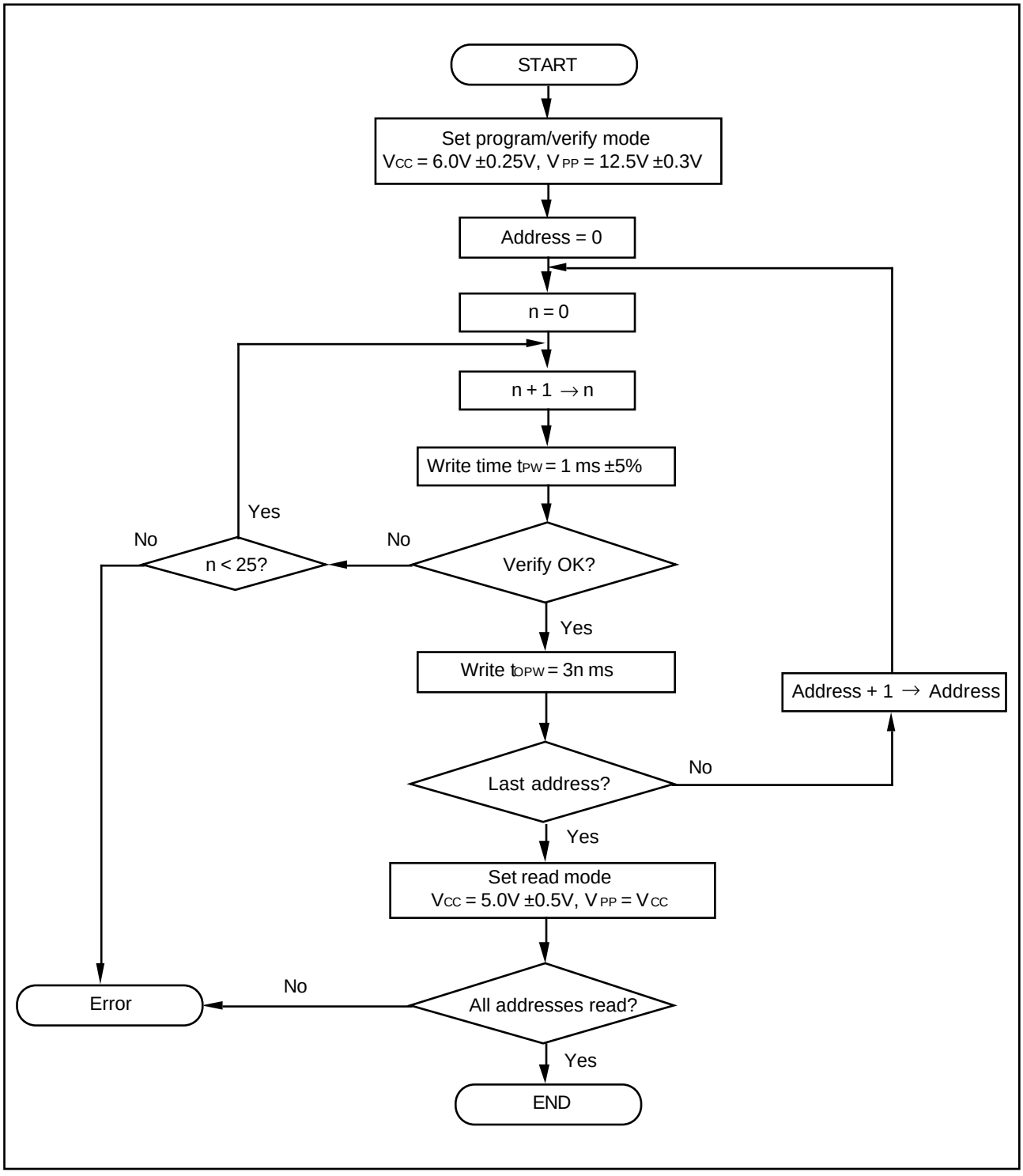

Figure 11-5. High-Speed Programming Flowchart

Table 11-5. DC Characteristics

(when V_{CC} = 6.0V ±0.25V, V_{PP} = 12.5V ±0.3V, V_{SS} = 0V, Ta = 25˚C ±5˚C)

Item		Symbol	Min	Typ	Max	Unit	Measurement conditions
Input High voltage	EO_7 – EO_0, EA_{14} – EA_0, $\overline{OE}$, $\overline{CE}$	V_{IH}	2.4	—	V_{CC} + 0.3	V	
Input Low voltage	EO_7 – EO_0, EA_{14} – EA_0, $\overline{OE}$, $\overline{CE}$	V_{IL}	–0.3	—	0.8	V	
Output High voltage	EO_7 – EO_0	V_{OH}	2.4	—	—	V	I_{OH} = –200µA
Output Low voltage	EO_7 – EO_0	V_{OL}	—	—	0.45	V	I_{OL} = 1.6mA
Input leakage current	EO_7 – EO_0, EA_{14} – EA_0, $\overline{OE}$, $\overline{CE}$	$\|I_{LI}\|$	—	—	2	µA	V_{in} = 5.25V/ 0.5V
V_{CC} current		I_{CC}	—	—	40	mA	
V_{PP} current		I_{PP}	—	—	40	mA	

Table 11-6. AC Characteristics

(when V_{CC} = 6.0V ±0.25V, V_{PP} = 12.5V ±0.3V, Ta = 25˚C ±5˚C)

Item	Symbol	Min	Typ	Max	Unit	Measurement conditions
Address setup time	t_{AS}	2	—	—	µs	See figure 11-6*
$\overline{OE}$ setup time	t_{OES}	2	—	—	µs	
Data setup time	t_{DS}	2	—	—	µs	
Address hold time	t_{AH}	0	—	—	µs	
Data hold time	t_{DH}	2	—	—	µs	
Data output disable time	t_{DF}	—	—	130	ns	
Vpp setup time	t_{VPS}	2	—	—	µs	
Program pulse width	t_{PW}	0.95	1.0	1.05	ms	

Note: * Input pulse level: 0.8V to 2.2V

Input rise/fall time ≤ 20ns

Timing reference levels: input—1.0V, 2.0V; output—0.8V, 2.0V

Table 11-6. AC Characteristics (cont.)

(when V_{CC} = 6.0V ±0.25V, V_{PP} = 12.5V ±0.3V, Ta = 25˚C ±5˚C)

Item	Symbol	Min	Typ	Max	Unit	Measurement conditions
$\overline{OE}$ pulse width for overwrite-programming	t_{OPW}	2.85	—	78.75	ms	See figure 11-6*
V_{CC} setup time	t_{VCS}	2	—	—	µs	
Data output delay time	t_{OE}	0	—	500	ns	

Note: * Input pulse level: 0.8V to 2.2V

Input rise/fall time ≤ 20ns

Timing reference levels: input—1.0V, 2.0V; output—0.8V, 2.0V

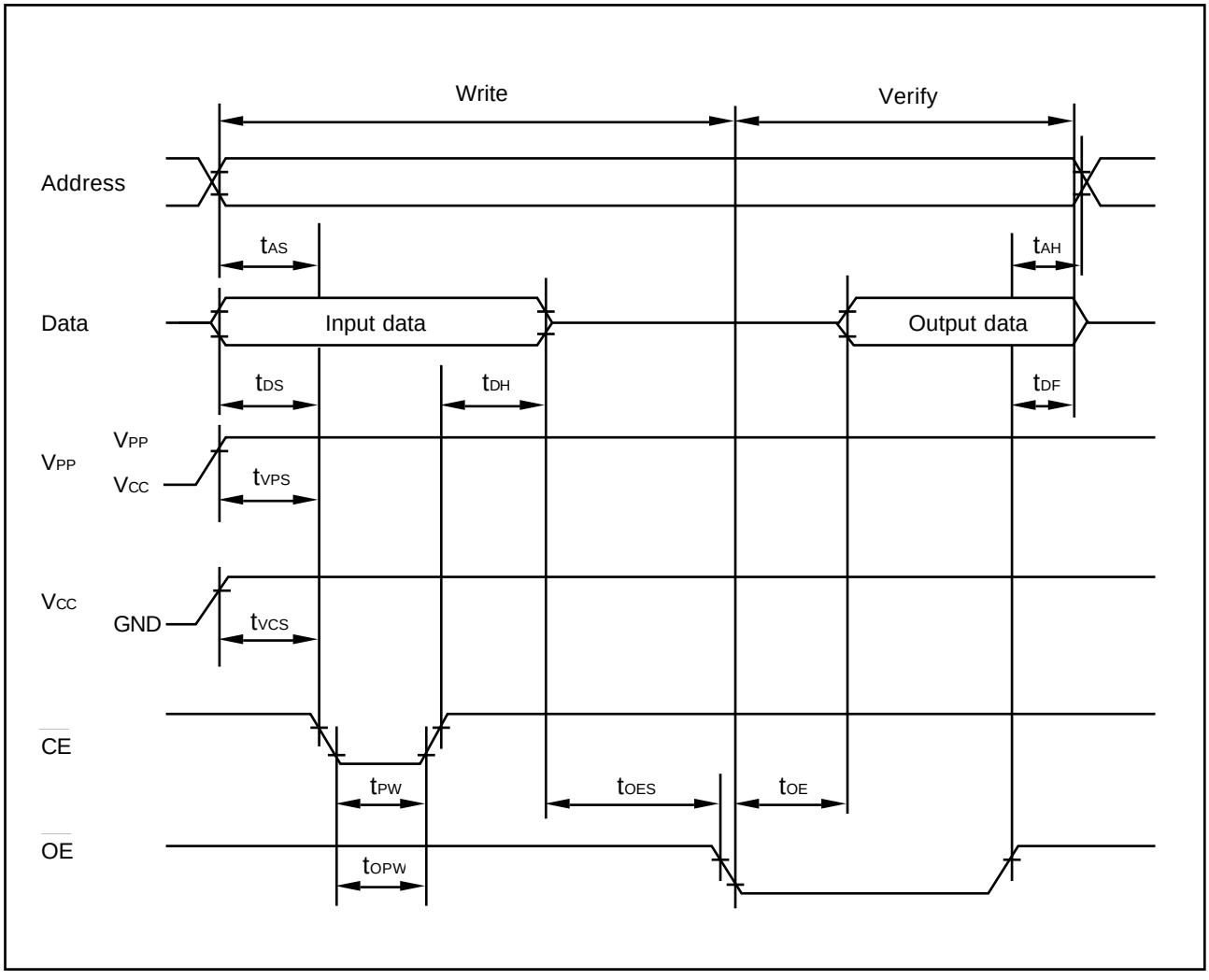

Figure 11-6. PROM Write/Verify Timing

11.3.2 Notes on Writing

(1) Write with the specified voltages and timing. The programming voltage (V_{PP}) is 12.5V.

Caution: Applied voltages in excess of the specified values can permanently destroy the chip. Be particularly careful about the PROM writer's overshoot characteristics.

If the PROM writer is set to Hitachi HN27256 or HN27C256 specifications, or to Intel specifications, V_{PP} will be 12.5V.

(2) Before writing data, check that the socket adapter and chip are correctly mounted in the PROM writer. Overcurrent damage to the chip can result if the index marks on the PROM writer, socket adapter, and chip are not correctly aligned.

(3) Don't touch the socket adapter or chip while writing. Touching either of these can cause contact faults and write errors.

11.3.3 Reliability of Written Data

An effective way to assure the data holding characteristics of the programmed chips is to bake them at 150˚C, then screen them for data errors. This procedure quickly eliminates chips with PROM memory cells prone to early failure.

Figure 11-7 shows the recommended screening procedure.

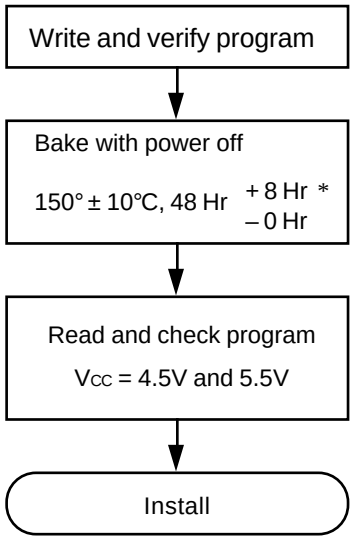

Note: * Baking time should be measured from the point when the baking oven reaches 150°C.

Figure 11-7. Recommended Screening Procedure

If a series of write errors occurs while the same PROM writer is in use, stop programming and check the PROM writer and socket adapter for defects, using a microcomputer chip with a windowed package and on-chip EPROM.

Please inform Hitachi of any abnormal conditions noted during programming or in screening of program data after high-temperature baking.

11.3.4 Erasing of Data

The windowed package enables data to be erased by illuminating the window with ultraviolet light. Table 11-7 lists the erasing conditions.

Table 11-7. Erasing Conditions

Item	Value
Ultraviolet wavelength	253.7 nm
Minimum illumination	15W·s/cm^2

The conditions in table 11-7 can be satisfied by placing a 12000µW/cm^2 ultraviolet lamp 2 or 3 centimeters directly above the chip and leaving it on for about 20 minutes.

11.4 Handling of Windowed Packages

(1) Glass Erasing Window: Rubbing the glass erasing window of a windowed package with a plastic material or touching it with an electrically charged object can create a static charge on the window surface which may cause the chip to malfunction.

If the erasing window becomes charged, the charge can be neutralized by a short exposure to ultraviolet light. This returns the chip to its normal condition, but it also reduces the charge stored in the floating gates of the PROM, so it is recommended that the chip be reprogrammed afterward.

Accumulation of static charge on the window surface can be prevented by the following precautions:

① When handling the package, ground yourself. Don't wear gloves. Avoid other possible sources of static charge.
② Avoid friction between the glass window and plastic or other materials that tend to accumulate static charge.
③ Be careful when using cooling sprays, since they may have a slight ion content.
④ Cover the window with an ultraviolet-shield label, preferably a label including a conductive material. Besides protecting the PROM contents from ultraviolet light, the label protects the chip by distributing static charge uniformly.

(2) Handling after Programming: Fluorescent light and sunlight contain small amounts of ultraviolet, so prolonged exposure to these types of light can cause programmed data to invert. In addition, exposure to any type of intense light can induce photoelectric effects that may lead to chip malfunction. It is recommended that after programming the chip, you cover the erasing window with a light-proof label (such as an ultraviolet-shield label).

Section 12. Power-Down State

12.1 Overview

The H8/329 Series has a power-down state that greatly reduces power consumption by stopping some or all of the chip functions. The power-down state includes three modes:

(1) Sleep mode – a software-triggered mode in which the CPU halts but the rest of the chip remains active
(2) Software standby mode – a software-triggered mode in which the entire chip is inactive
(3) Hardware standby mode – a hardware-triggered mode in which the entire chip is inactive

Table 12-1 lists the conditions for entering and leaving the power-down modes. It also indicates the status of the CPU, on-chip supporting modules, etc. in each power-down mode.

Table 12-1. Power-Down State

Mode	Entering procedure	Clock	CPU	CPU Reg's.	Sup. Mod.	RAM	I/O ports	Exiting methods
Sleep mode	Execute SLEEP instruction	Run	Halt	Held	Run	Held	Held	• Interrupt • $\overline{\text{RES}}$ • $\overline{\text{STBY}}$
Software standby mode	Set SSBY bit in SYSCR to "1," then execute SLEEP instruction	Halt	Halt	Held	Halt and initialized	Held	Held	• $\overline{\text{NMI}}$ • $\overline{\text{IRQ}}_0$ – $\overline{\text{IRQ}}_2$ • $\overline{\text{STBY}}$ • $\overline{\text{RES}}$
Hardware standby mode	Set $\overline{\text{STBY}}$ pin to Low level	Halt	Halt	Not held	Halt and initialized	Held	High impedance state	• $\overline{\text{STBY}}$ High, then $\overline{\text{RES}}$ Low → High

Notes: 1. SYSCR: System control register
2. SSBY: Software standby bit

12.2 System Control Register: Power-Down Control Bits

Bits 7 to 4 of the system control register (SYSCR) concern the power-down state. Specifically, they concern the software standby mode.

Table 12-2 lists the attributes of the system control register.

Table 12-2. System Control Register

Name	Abbreviation	R/W	Initial value	Address
System control register	SYSCR	R/W	H'0B	H'FFC4

Bit	7	6	5	4	3	2	1	0
	SSBY	STS2	STS1	STS0	—	NMIEG	—	RAME
Initial value	0	0	0	0	1	0	1	1
Read/Write	R/W	R/W	R/W	R/W	—	R/W	—	R/W

Bit 7—Software Standby (SSBY): This bit enables or disables the transition to the software standby mode.

On recovery from the software standby mode by an external interrupt, SSBY remains set to “1.” To clear this bit, software must write a “0.”

Bit 7

SSBY	Description	
0	The SLEEP instruction causes a transition to the sleep mode.	(Initial value)
1	The SLEEP instruction causes a transition to the software standby mode.	

Bits 6 to 4—Standby Timer Select 2 to 0 (STS2 to STS0): These bits select the clock settling time when the chip recovers from the software standby mode by an external interrupt. During the selected time, the clock oscillator runs but clock pulses are not supplied to the CPU or the on-chip supporting modules.

Bit 6 STS2	Bit 5 STS1	Bit 4 STS0	Description	
0	0	0	Settling time = 8192 states	(Initial value)
0	0	1	Settling time = 16384 states	
0	1	0	Settling time = 32768 states	
0	1	1	Settling time = 65536 states	
1	—	—	Settling time = 131072 states	

When the on-chip clock generator is used, the STS bits should be set to allow a settling time of at least 10ms. Table 12-3 lists the settling times selected by these bits at several clock frequencies and indicates the recommended settings.

When the chip is externally clocked, the STS bits can be set to any value. The minimum value (STS2 = STS1 = STS0 = “0”) is recommended.

Table 12-3. Times Set by Standby Timer Select Bits (Unit: ms)

			Settling time	System clock frequency (MHz)						
STS2	**STS1**	**STS0**	**(states)**	**10**	**8**	**6**	**4**	**2**	**1**	**0.5**
0	0	0	8192	0.8	1.0	1.3	2.0	4.1	8.2	**16.4**
0	0	1	16384	1.6	2.0	2.7	4.1	8.2	**16.4**	32.8
0	1	0	32768	3.3	4.1	5.5	8.2	**16.4**	32.8	65.5
0	1	1	65536	6.6	8.2	**10.9**	**16.4**	32.8	65.5	131.1
1	—	—	131072	**13.1**	**16.4**	21.8	32.8	65.5	131.1	262.1

Notes: 1. All times are in milliseconds.
2. Recommended values are printed in boldface.

12.3 Sleep Mode

The sleep mode provides an effective way to conserve power while the CPU is waiting for an external interrupt or an interrupt from an on-chip supporting module.

12.3.1 Transition to Sleep Mode

When the SSBY bit in the system control register is cleared to “0,” execution of the SLEEP instruction causes a transition from the program execution state to the sleep mode. After executing the SLEEP instruction, the CPU halts, but the contents of its internal registers remain unchanged. The on-chip supporting modules continue to operate normally.

12.3.2 Exit from Sleep Mode

The chip wakes up from the sleep mode when it receives an internal or external interrupt request, or a Low input at the $\overline{\text{RES}}$ or $\overline{\text{STBY}}$ pin.

(1) Wake-Up by Interrupt: An interrupt releases the sleep mode and starts the CPU’s interrupt-handling sequence.

If an interrupt from an on-chip supporting module is disabled by the corresponding enable/disable bit in the module’s control register, the interrupt cannot be requested, so it cannot wake the chip up. Similarly, the CPU cannot be awoken by an interrupt other than NMI if the I (interrupt mask) bit in the CCR (condition code register) is set when the SLEEP instruction is executed.

(2) Wake-Up by $\overline{\text{RES}}$ pin: When the $\overline{\text{RES}}$ pin goes Low, the chip exits from the sleep mode to the reset state.

(3) Wake-Up by $\overline{\text{STBY}}$ pin: When the $\overline{\text{STBY}}$ pin goes Low, the chip exits from the sleep mode to the hardware standby mode.

12.4 Software Standby Mode

In the software standby mode, the system clock stops and chip functions halt, including both CPU functions and the functions of the on-chip supporting modules. Power consumption is reduced to an extremely low level. The on-chip supporting modules and their registers are reset to their initial states, but as long as a minimum necessary voltage supply is maintained (at least 2V), the contents of the CPU registers and on-chip RAM remain unchanged.

12.4.1 Transition to Software Standby Mode

To enter the software standby mode, set the standby bit (SSBY) in the system control register (SYSCR) to "1," then execute the SLEEP instruction.

12.4.2 Exit from Software Standby Mode

The chip can be brought out of the software standby mode by an input at one of six pins: $\overline{\text{NMI}}$, $\overline{\text{IRQ}}_0$, $\overline{\text{IRQ}}_1$, $\overline{\text{IRQ}}_2$, $\overline{\text{RES}}$, or $\overline{\text{STBY}}$.

(1) Recovery by External Interrupt: When an $\overline{\text{NMI}}$, $\overline{\text{IRQ}}_0$, $\overline{\text{IRQ}}_1$, or $\overline{\text{IRQ}}_2$ request signal is received, the clock oscillator begins operating. After the waiting time set in the system control register (bits STS2 to STS0), clock pulses are supplied to the CPU and on-chip supporting modules. The CPU executes the interrupt-handling sequence for the requested interrupt, then returns to the instruction after the SLEEP instruction. The SSBY bit is not cleared.

See section 12.2, "System Control Register: Power-Down Control Bits," for information about the STS bits.

(2) Recovery by $\overline{\text{RES}}$ Pin: When the $\overline{\text{RES}}$ pin goes Low, the clock oscillator starts and clock pulses are supplied to the entire chip. Next, when the $\overline{\text{RES}}$ pin goes High, the CPU begins executing the reset sequence. The SSBY bit is cleared to "0."

The $\overline{\text{RES}}$ pin must be held Low long enough for the clock to stabilize.

(3) Recovery by $\overline{\text{STBY}}$ Pin: When the $\overline{\text{STBY}}$ pin goes Low, the chip exits from the software standby mode to the hardware standby mode.

12.4.3 Sample Application of Software Standby Mode

In this example the chip enters the software standby mode when $\overline{\text{NMI}}$ goes Low and exits when $\overline{\text{NMI}}$ goes High, as shown in figure 12-1.

The NMI edge bit (NMIEG) in the system control register is originally cleared to “0,” selecting the falling edge. When $\overline{\text{NMI}}$ goes Low, the $\overline{\text{NMI}}$ interrupt handling routine sets NMIEG to “1,” sets SSBY to “1” (selecting the rising edge), then executes the SLEEP instruction. The chip enters the software standby mode. It recovers from the software standby mode on the next rising edge of $\overline{\text{NMI}}$.

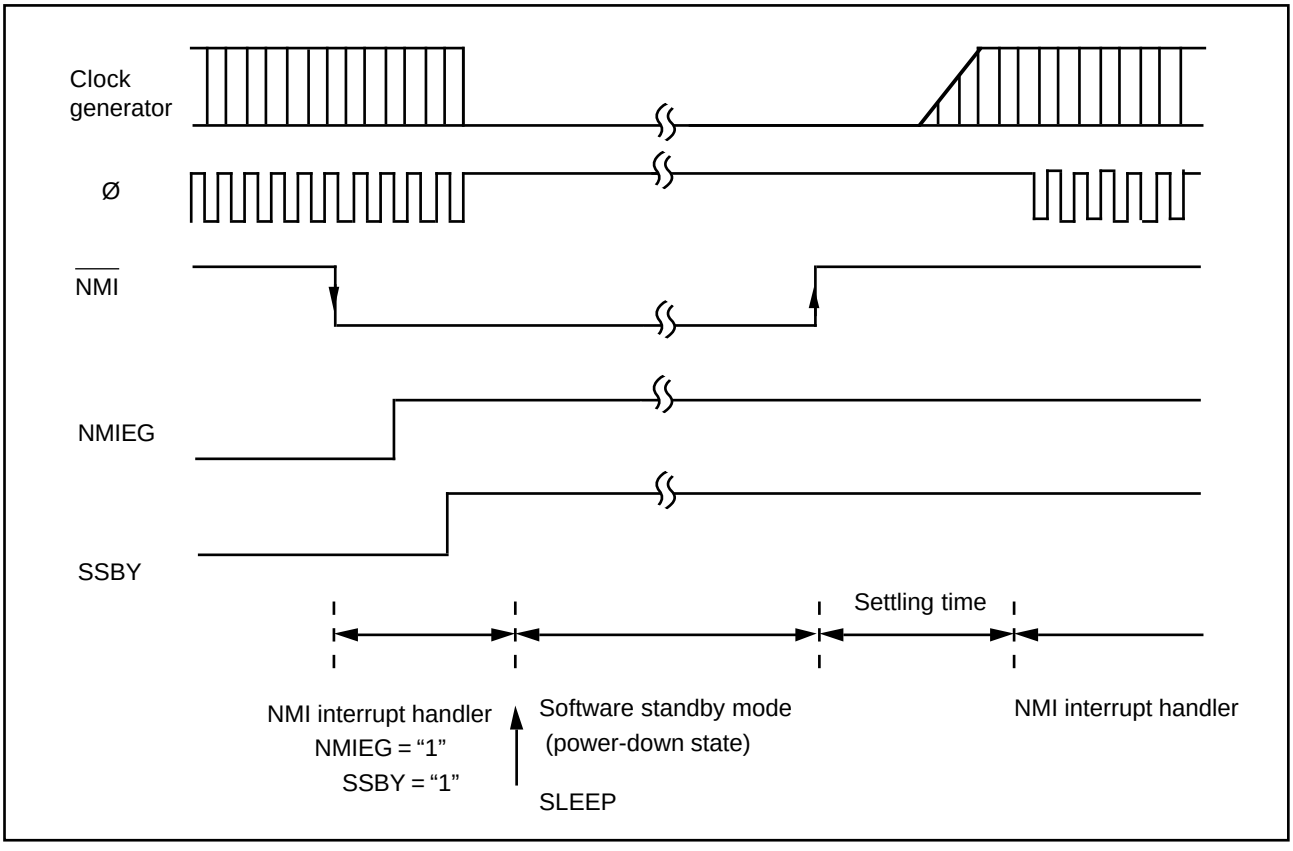

Figure 12-1. Software Standby Mode (when) NMI Timing

12.4.4 Application Note

The I/O ports retain their current states in the software standby mode. If a port is in the High output state, the current dissipation caused by the High output current is not reduced.

12.5 Hardware Standby Mode

12.5.1 Transition to Hardware Standby Mode

Regardless of its current state, the chip enters the hardware standby mode whenever the $\overline{\text{STBY}}$ pin goes Low.

The hardware standby mode reduces power consumption drastically by halting the CPU, stopping all the functions of the on-chip supporting modules, and placing I/O ports in the high-impedance state. The registers of the on-chip supporting modules are reset to their initial values. Only the on-chip RAM is held unchanged, provided the minimum necessary voltage supply is maintained (at least 2V).

Notes:
1. The RAME bit in the system control register should be cleared to “0” before the $\overline{\text{STBY}}$ pin goes Low, to disable the on-chip RAM during the hardware standby mode.
2. Do not change the inputs at the mode pins (MD1, MD0) during hardware standby mode. Be particularly careful not to let both mode pins go Low in hardware standby mode, since that places the chip in PROM mode and increases current dissipation.

12.5.2 Recovery from Hardware Standby Mode

Recovery from the hardware standby mode requires inputs at both the $\overline{\text{STBY}}$ and $\overline{\text{RES}}$ pins.

When the $\overline{\text{STBY}}$ pin goes High, the clock oscillator begins running. The $\overline{\text{RES}}$ pin should be Low at this time and should be held Low long enough for the clock to stabilize. When the $\overline{\text{RES}}$ pin changes from Low to High, the reset sequence is executed and the chip returns to the program execution state.

12.5.3 Timing Relationships

Figure 12-2 shows the timing relationships in the hardware standby mode.
In the sequence shown, first $\overline{RES}$ goes Low, then $\overline{STBY}$ goes Low, at which point the chip enters the hardware standby mode. To recover, first $\overline{STBY}$ goes High, then after the clock settling time, $\overline{RES}$ goes High.

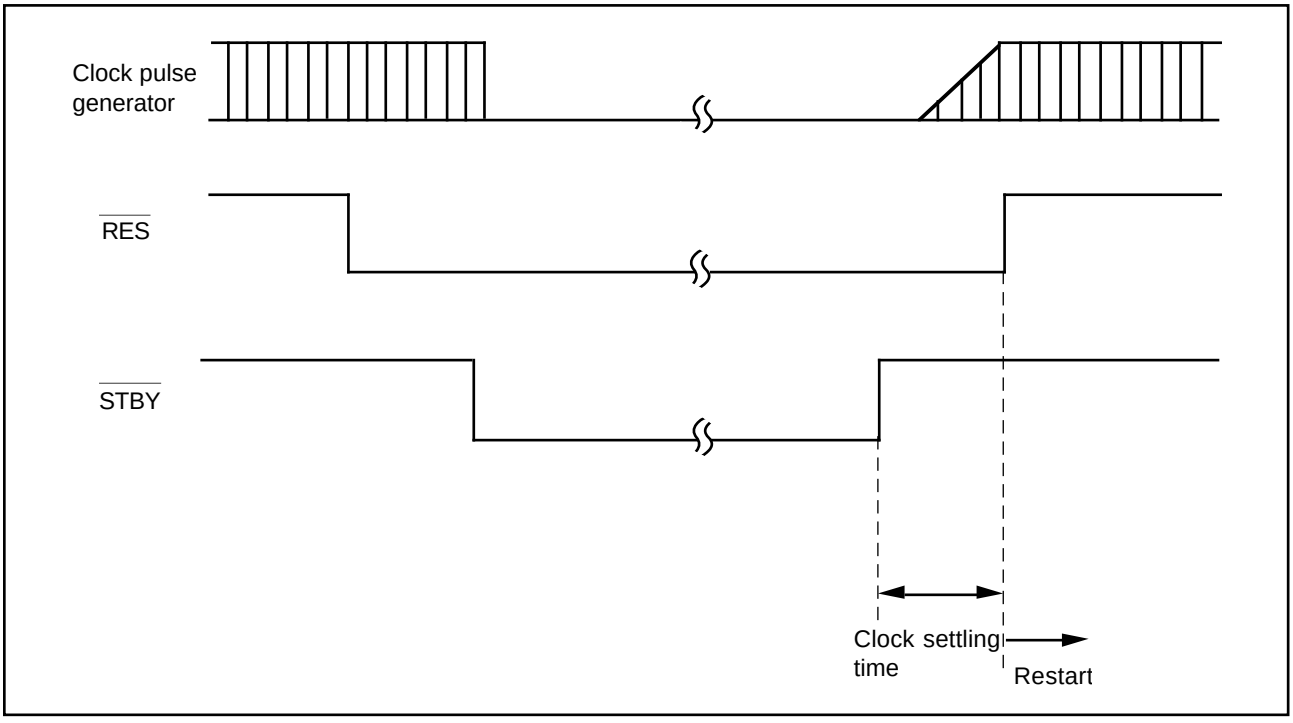

Figure 12-2. Hardware Standby Mode Timing

Section 13. Clock Pulse Generator

13.1 Overview

The H8/329 Series has a built-in clock pulse generator (CPG) consisting of an oscillator circuit, a system (Ø) clock divider, and a prescaler. The prescaler generates clock signals for the on-chip supporting modules.

13.1.1 Block Diagram

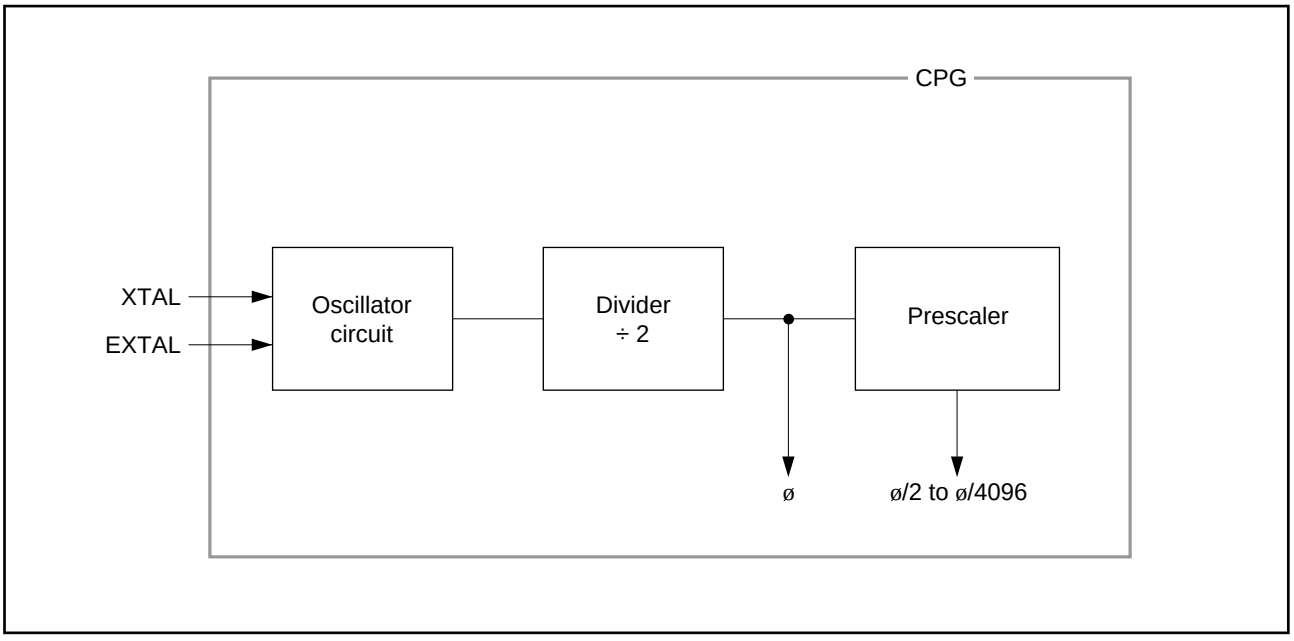

Figure 13-1. Block Diagram of Clock Pulse Generator

13.2 Oscillator Circuit

If an external crystal is connected across the EXTAL and XTAL pins, the on-chip oscillator circuit generates a clock signal for the system clock divider. Alternatively, an external clock signal can be applied to the EXTAL pin.

(1) Connecting an External Crystal

① **Circuit Configuration:** An external crystal can be connected as in the example in figure 13-2. An AT-cut parallel resonating crystal should be used.

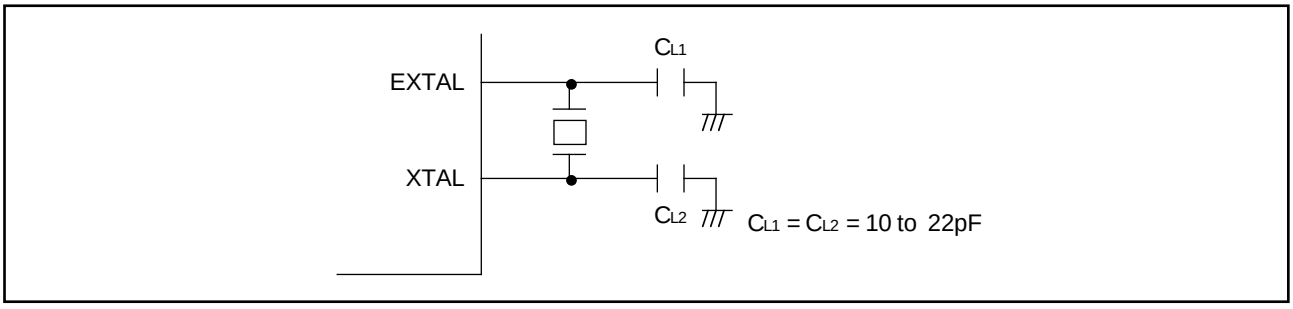

Figure 13-2. Connection of Crystal Oscillator (Example)

② **Crystal Oscillator:** Figure 15-3 shows an equivalent circuit of the external crystal. The external crystal should have the characteristics listed in table 13-1.

Table 13-1. External Crystal Parameters

Frequency (MHz)	2	4	8	12	16	20
Rs max (Ω)	500	120	60	40	30	20
C_0 (pF)			7 pF max			

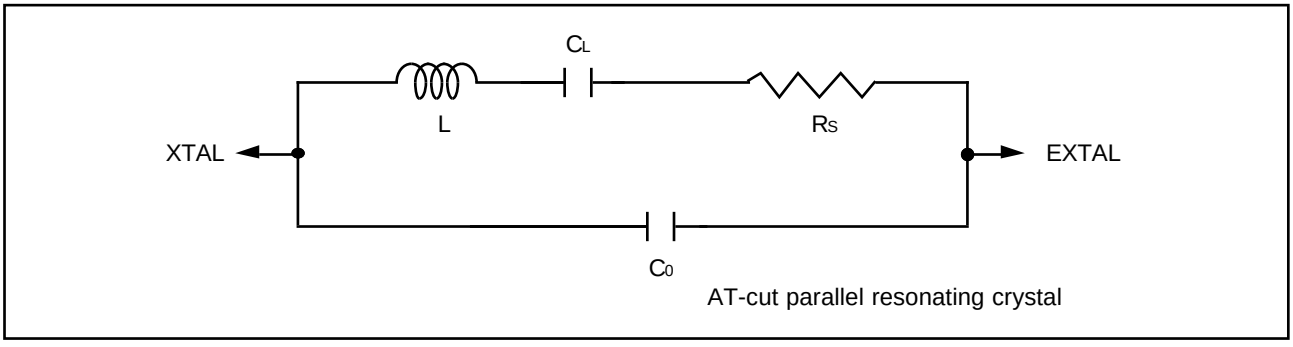

Figure 13-3. Equivalent Circuit of External Crystal

③ **Note on Board Design:** When an external crystal is connected, other signal lines should be kept away from the crystal circuit to prevent induction from interfering with correct oscillation. See figure 13-4. The crystal and its load capacitors should be placed as close as possible to the XTAL and EXTAL pins.

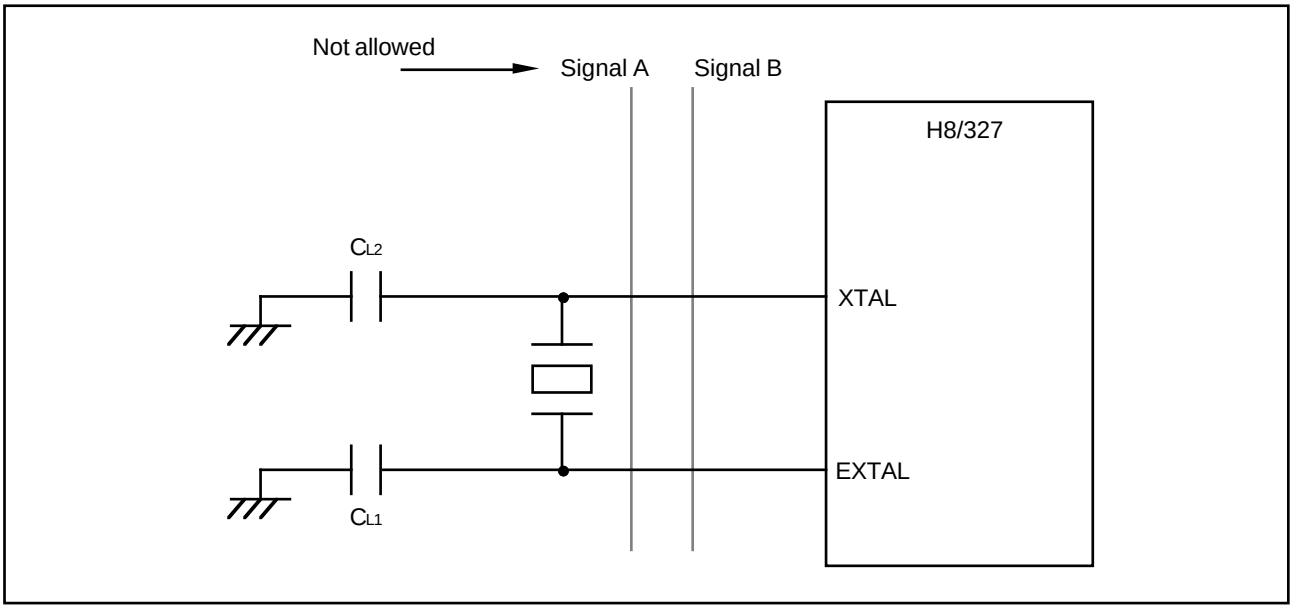

Figure 13-4. Notes on Board Design around External Crystal

(2) Input of External Clock Signal

① **Circuit Configuration:** An external clock signal can be input as shown in the examples in figure 13-5. In example (b), the external clock should be held high during standby.

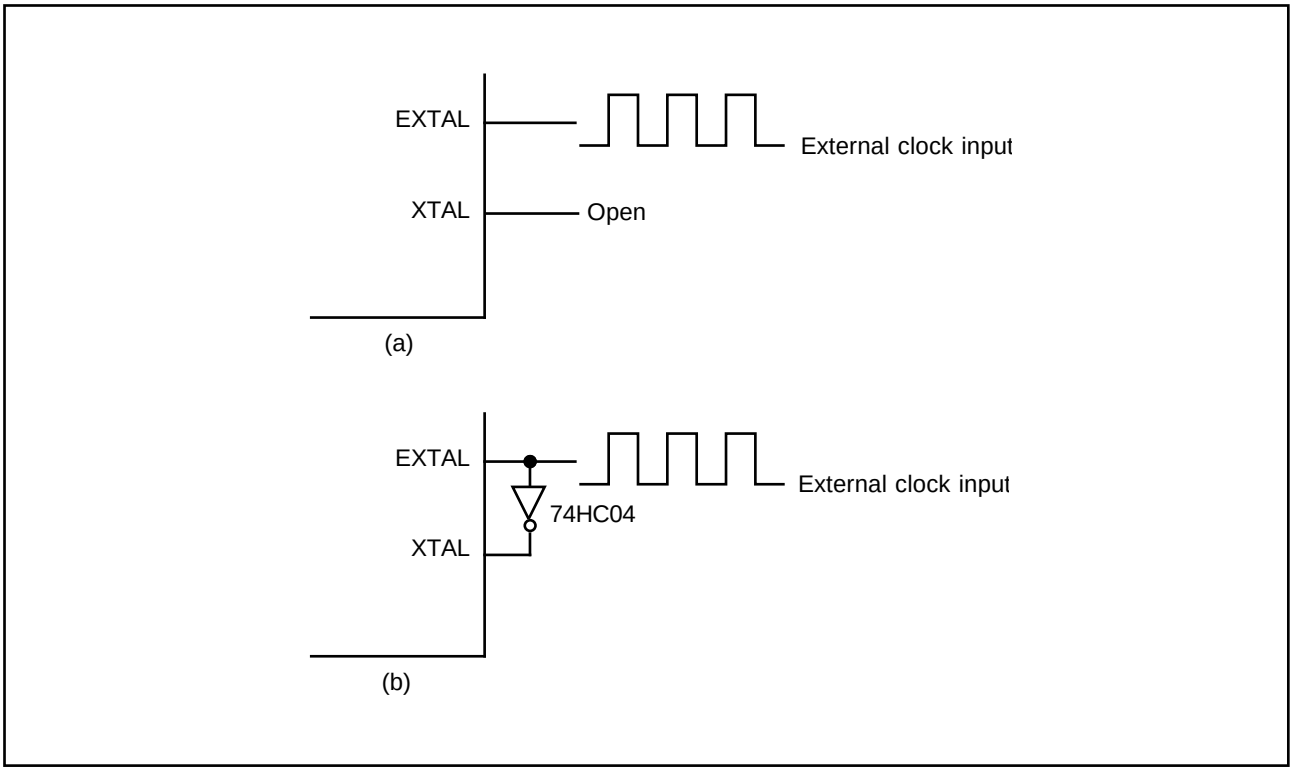

Figure 13-5. External Clock Input (Example)

② External Clock Input

Frequency	Double the system clock (Ø) frequency
Duty factor	45% to 55%

13.3 System Clock Divider

The system clock divider divides the crystal oscillator or external clock frequency by 2 to create the system clock (Ø).

Section 14. Electrical Specifications

14.1 Absolute Maximum Ratings

Table 14-1 lists the absolute maximum ratings.

Table 14-1. Absolute Maximum Ratings

Item		Symbol	Rating	Unit
Supply voltage		V_{CC}	–0.3 to +7.0	V
Programming voltage		V_{PP}	–0.3 to +13.5	V
Input voltage	Ports 1 – 6	V_{in}	–0.3 to V_{CC} + 0.3	V
	Port 7	V_{in}	–0.3 to AV_{CC} + 0.3	V
Analog supply voltage		AV_{CC}	–0.3 to +7.0	V
Analog input voltage		V_{AN}	–0.3 to AV_{CC} + 0.3	V
Operating temperature		T_{opr}	Regular specifications: –20 to +75	˚C
			Wide-range specifications: – 40 to +85	˚C
Storage temperature		T_{stg}	–55 to +125	˚C

Note: Exceeding the absolute maximum ratings shown in table 14-1 can permanently destroy the chip.

14.2 Electrical Characteristics

14.2.1 DC Characteristics

Table 14-2 lists the DC characteristics of the 5V versions of the H8/329 Series. Table 14-3 lists the DC characteristics of the 3V versions. Table 14-4 gives the allowable current output values of the 5V versions. Table 14-5 gives the allowable current output values of the 3V versions.

Table 14-2. DC Characteristics (5V Versions)

Conditions: V_{CC} = 5.0V ±10%, AV_{CC} = 5.0V ±10%*, V_{SS} = AV_{SS} = 0V,
Ta = –20 to 75˚C (regular specifications), Ta = –40 to 85˚C (wide-range specifications)

Item		Symbol	Min	Typ	Max	Unit	Measurement conditions
Schmitt trigger input voltage (1)	$P6_7$ – $P6_2$, $P6_0$, $P4_7$, $P4_4$ – $P4_0$	V_T^-	1.0	–	–	V	
		V_T^+	–	–	$V_{CC} \times 0.7$	V	
		$V_T^+ - V_T^-$	0.4	–	–	V	
Input High voltage (2)	$\overline{RES}$, $\overline{STBY}$, $\overline{NMI}$ MD_1, MD_0 EXTAL	V_{IH}	V_{CC} – 0.7	–	V_{CC} + 0.3	V	
	$P7_7$ – $P7_0$		2.0	–	AV_{CC} + 0.3	V	
Input High voltage	Input pins other than (1) and (2) above	V_{IH}	2.0	–	V_{CC} + 0.3	V	
Input Low voltage (3)	$\overline{RES}$, $\overline{STBY}$ MD_1, MD_0	V_{IL}	–0.3	–	0.5	V	
Input Low voltage	Input pins other than (1) and (3) above	V_{IL}	–0.3	–	0.8	V	
Output High voltage	All output pins	V_{OH}	V_{CC} – 0.5	–	–	V	I_{OH} = –200µA
			3.5	–	–	V	I_{OH} = –1.0mA
Output Low voltage	All output pins	V_{OL}	–	–	0.4	V	I_{OL} = 1.6mA
	Ports 1 and 2		–	–	1.0	V	I_{OL} = 10.0mA
Input leakage current	$\overline{RES}$	$\|I_{in}\|$	–	–	10.0	µA	V_{in} = 0.5V to V_{CC} – 0.5V
	$\overline{STBY}$, $\overline{NMI}$, MD_1, MD_0		–	–	1.0	µA	
	$P7_7$ – $P7_0$		–	–	1.0	µA	V_{in} = 0.5V to AV_{CC} – 0.5V
Leakage current in 3-state (off state)	Ports 1, 2, 3 4, 5, 6	$\|I_{TSI}\|$	–	–	1.0	µA	V_{in} = 0.5V to V_{CC} – 0.5V
Input pull-up MOS current	Ports 1, 2, 3	–Ip	30	–	250	µA	V_{in} = 0V

Note: * Connect AV_{CC} to the power supply (V_{CC}) even when the A/D converter is not used.

Table 14-2. DC Characteristics (5V Versions) (cont.)

Conditions: V_{CC} = 5.0V ±10%, AV_{CC} = 5.0V ±10%*1, V_{SS} = AV_{SS} = 0V, Ta = –20 to 75˚C (regular specifications), Ta = –40 to 85˚C (wide-range specifications)

Item		Symbol	Min	Typ	Max	Unit	Measurement conditions
Input capacitance	$\overline{RES}$	C_{in}	–	–	60	pF	V_{in} = 0V
	$\overline{NMI}$		–	–	30	pF	f = 1MHz
	All input pins except $\overline{RES}$ and $\overline{NMI}$		–	–	15	pF	Ta = 25˚C
Current dissipation*2	Normal operation	I_{CC}	–	12	25	mA	f = 6MHz
			–	16	30	mA	f = 8MHz
			–	20	40	mA	f = 10MHz
	Sleep mode		–	8	15	mA	f = 6MHz
			–	10	20	mA	f = 8MHz
			–	12	25	mA	f = 10MHz
	Standby modes*3		–	0.01	5.0	µA	
Analog supply current	During A/D conversion	AI_{CC}	–	0.6	1.5	mA	
	Waiting		–	0.01	5.0	µA	
RAM standby voltage		V_{RAM}	2.0	–	–	V	

Notes: *1 Connect AV_{CC} to the power supply (+5V) even when the A/D converter is not used.

*2 Current dissipation values assume that $V_{IH\ min} = V_{CC} – 0.5V$, $V_{IL\ max}$ = 0.5V, all output pins are in the no-load state, and all input pull-up transistors are off.

*3 For these values it is assumed that $V_{RAM} \leq V_{CC} < 4.5V$ and $V_{IH\ min} = V_{CC} \times 0.9$, $V_{IL\ max}$ = 0.3V.

Table 14-3. DC Characteristics (3V Versions)

Conditions: V_{CC} = 3.0V ±10%, AV_{CC} = 5.0V ±10%*1, V_{SS} = AV_{SS} = 0V, Ta = –20 to 75˚C

Item		Symbol	Min	Typ	Max	Unit	Measurement conditions
Schmitt trigger input voltage*2 (1)	$P6_7$ – $P6_2$, $P6_0$, $P4_7$, $P4_4$ – $P4_0$	V_{T^-}	$V_{CC} \times 0.15$	–	–	V	
		V_{T^+}	–	–	$V_{CC} \times 0.7$	V	
		$V_{T^+} - V_{T^-}$	0.2	–	–	V	
Input High voltage*2 (2)	$\overline{RES}$, $\overline{STBY}$ MD_1, MD_0 EXTAL, $\overline{NMI}$	V_{IH}	$V_{CC} \times 0.9$	–	V_{CC} + 0.3	V	
	$P7_7$ – $P7_0$		$V_{CC} \times 0.7$	–	AV_{CC} + 0.3	V	
	Input pins other than (1) and (2) above		$V_{CC} \times 0.7$	–	V_{CC} + 0.3	V	
Input Low voltage*2 (3)	$\overline{RES}$, $\overline{STBY}$ MD_1, MD_0	V_{IL}	–0.3	–	$V_{CC} \times 0.1$	V	
	Input pins other than (1) and (3) above		–0.3	–	$V_{CC} \times 0.15$	V	
Output High voltage	All output pins	V_{OH}	V_{CC} – 0.4	–	–	V	I_{OH} = –200µA
			V_{CC} – 0.9	–	–	V	I_{OH} = –1mA
Output Low voltage	All output pins	V_{OL}	–	–	0.4	V	I_{OL} = 0.8mA
	Ports 1 and 2		–	–	0.4	V	I_{OL} = 1.6mA
Input leakage current	$\overline{RES}$	$\lvert I_{in} \rvert$	–	–	10.0	µA	V_{in} = 0.5 to V_{CC} – 0.5V
	$\overline{STBY}$, $\overline{NMI}$, MD_1, MD_0		–	–	1.0	µA	
	$P7_7$ – $P7_0$		–	–	1.0	µA	V_{in} = 0.5 to AV_{CC} – 0.5V
Leakage current in 3-state (off state)	Ports 1, 2, 3 4, 5, 6	$\lvert I_{TSI} \rvert$	–	–	1.0	µA	V_{in} = 0.5 to V_{CC} – 0.5V
Input pull-up MOS current	Ports 1, 2, 3	$-I_p$	3	–	120	µA	V_{in} = 0V

Notes: *1 Connect AV_{CC} to the power supply (V_{CC}) even when the A/D converter is not used.

*2 In the range 3.3V < V_{CC} < 4.5V, for the input levels of V_{IH} and V_T, apply the higher of the values given for the 5V and 3V versions. For V_{IL} and V_{T^-}, apply the lower of the values given for the 5V and 3V versions.

Table 14.3. DC Characteristics (3V Versions) (cont.)

Conditions: V_{CC} = 3.0V ±10%, AV_{CC} = 5.0V ±10%*1, V_{SS} = AV_{SS} = 0V, Ta = –20 to 70˚C

Item		Symbol	Min	Typ	Max	Unit	Measurement conditions
Input capacitance	$\overline{RES}$	C_{in}	–	–	60	pF	V_{in} = 0V
	$\overline{NMI}$		–	–	30	pF	f = 1MHz
	All input pins except $\overline{RES}$ and $\overline{NMI}$		–	–	15	pF	Ta = 25˚C
Current dissipation*2	Normal operation	I_{CC}	–	4	–	mA	f = 3MHz
			–	6	12	mA	f = 5MHz
	Sleep mode		–	3	–	mA	f = 3MHz
			–	4	8	mA	f = 5MHz
	Standby modes*3		–	0.01	5.0	µA	
Analog supply current	During A/D conversion	AI_{CC}	–	0.6	1.5	mA	
	Waiting		–	0.01	5.0	µA	
RAM backup voltage (in standby modes)		V_{RAM}	2.0	–	–	V	

Notes: *1 Connect AV_{CC} to the power supply (+3V) even when the A/D converter is not used.

*2 Current dissipation values assume that V_{IH} min. = V_{CC} – 0.5V, V_{IL} max. = 0.5V, all output pins are in the no-load state, and all input pull-up transistors are off.

*3 For these values it is assumed that $V_{RAM} \leq V_{CC} < 2.7V$ and V_{IH} min = $V_{CC} \times 0.9$, V_{IL} max = 0.3V.

Table 14-4. Allowable Output Current Values (5V Versions)

Conditions: V_{CC} = 5.0V ±10%, AV_{CC} = 5.0V ±10%, V_{SS} = AV_{SS} = 0V, Ta = –20 to 75˚C (regular specifications), Ta = –40 to 85˚C (wide-range specifications)

Item		Symbol	Min	Typ	Max	Unit
Allowable output Low current (per pin)	Ports 1 and 2	I_{OL}	–	–	10	mA
	Other output pins		–	–	2.0	mA
Allowable output Low current (total)	Ports 1 and 2, total	ΣI_{OL}	–	–	80	mA
	Total of all output		–	–	120	mA
Allowable output High current (per pin)	All output pins	$-I_{OH}$	–	–	2.0	mA
Allowable output High current (total)	Total of all output pins	$\Sigma -I_{OH}$	–	–	40	mA

Table 14-5. Allowable Output Current Values (3V Versions)

Conditions: V_{CC} = 3.0V ±10%, AV_{CC} = 5.0V ±10%, V_{SS} = AV_{SS} = 0V, Ta = –20 to 75˚C

Item		Symbol	Min	Typ	Max	Unit
Allowable output Low current (per pin)	Ports 1 and 2	I_{OL}	–	–	2	mA
	Other output pins		–	–	1	mA
Allowable output Low current (total)	Ports 1 and 2, total	ΣI_{OL}	–	–	40	mA
	All output pins		–	–	60	mA
Allowable output High current (per pin)	All output pins	$-I_{OH}$	–	–	2	mA
Allowable output High current (total)	Total of all output pins	$\Sigma -I_{OH}$	–	–	30	mA

Note: To avoid degrading the reliability of the chip, be careful not to exceed the output current values in tables 14-4 and 14-5. In particular, when driving a Darlington transistor pair or LED directly, be sure to insert a current-limiting resistor in the output path. See figures 14-1 and 14-2.

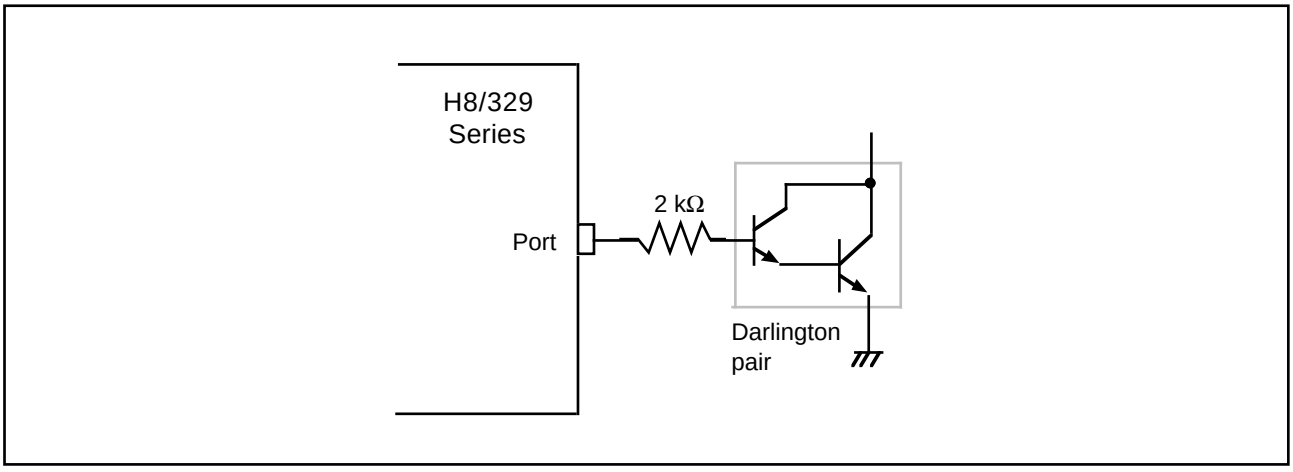

Figure 14-1. Example of Circuit for Driving a Darlington Pair (5V Versions)

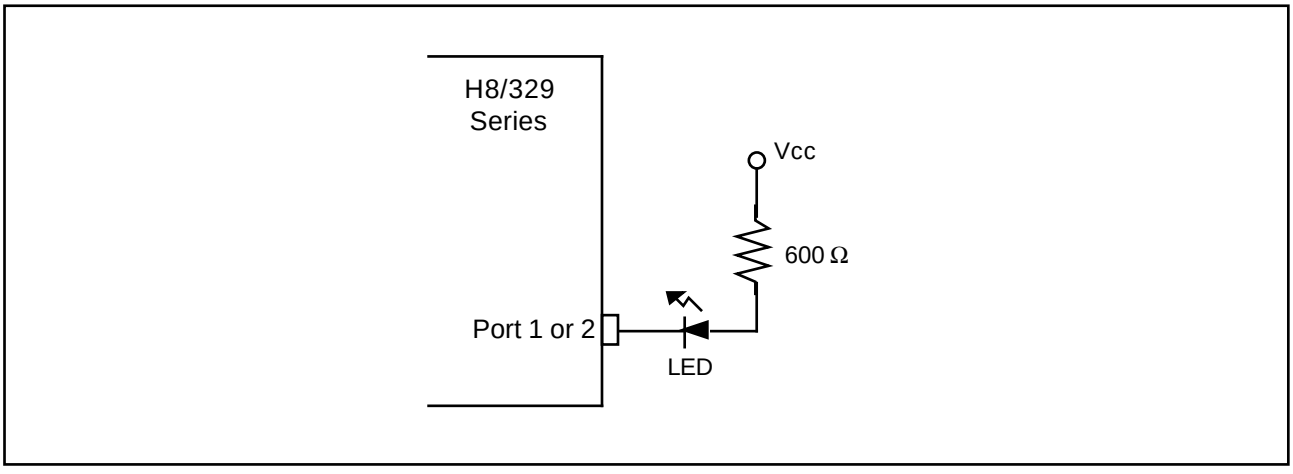

Figure 14-2. Example of Circuit for Driving an LED (5V Versions)

14.2.2 AC Characteristics

The AC characteristics of the H8/329 Series are listed in three tables. Bus timing parameters are given in table 14-6, control signal timing parameters in table 14-7, and timing parameters of the on-chip supporting modules in table 14-8.

Table 14-6. Bus Timing

Condition A: V_{CC} = 5.0V ±10%, V_{SS} = 0V, Ø = 0.5MHz to maximum operating frequency,
Ta = –20 to 75˚C (regular specifications),
Ta = –40 to 85˚C (wide-range specifications)

Condition B: V_{CC} = 3.0V ±10%, V_{SS} = 0V, Ø = 0.5MHz to maximum operating frequency,
Ta = –20 to 75˚C

		Condition B		Condition A							
		5MHz		6MHz		8MHz		10MHz			Measurement
Item	**Symbol**	**Min**	**Max**	**Min**	**Max**	**Min**	**Max**	**Min**	**Max**	**Unit**	**conditions**
Clock cycle time	t_{cyc}	200	2000	166.7	2000	125	2000	100	2000	ns	Fig. 14-4
Clock pulse width Low	t_{CL}	70	–	65	–	45	–	35	–	ns	Fig. 14-4
Clock pulse width High	t_{CH}	70	–	65	–	45	–	35	–	ns	Fig. 14-4
Clock rise time	t_{Cr}	–	25	–	15	–	15	–	15	ns	Fig. 14-4
Clock fall time	t_{Cf}	–	25	–	15	–	15	–	15	ns	Fig. 14-4
Address delay time	t_{AD}	–	90	–	70	–	60	–	50	ns	Fig. 14-4
Address hold time	t_{AH}	30	–	30	–	25	–	20	–	ns	Fig. 14-4
Address strobe delay time	t_{ASD}	–	80	–	70	–	60	–	40	ns	Fig. 14-4
Write strobe delay time	t_{WSD}	–	80	–	70	–	60	–	50	ns	Fig. 14-4
Strobe delay time	t_{SD}	–	90	–	70	–	60	–	50	ns	Fig. 14-4
Write strobe pulse width*	t_{WSW}	200	–	200	–	150	–	120	–	ns	Fig. 14-4
Address setup time 1*	t_{AS1}	25	–	25	–	20	–	15	–	ns	Fig. 14-4
Address setup time 2*	t_{AS2}	105	–	105	–	80	–	65	–	ns	Fig. 14-4
Read data setup time	t_{RDS}	90	–	70	–	50	–	35	–	ns	Fig. 14-4
Read data hold time	t_{RDH}	0	–	0	–	0	–	0	–	ns	Fig. 14-4
Read data access time*	t_{ACC}	–	300	–	270	–	210	–	170	ns	Fig. 14-4
Write data delay time	t_{WDD}	–	125	–	85	–	75	–	75	ns	Fig. 14-4
Write data setup time	t_{WDS}	10	–	20	–	10	–	5	–	ns	Fig. 14-4
Write data hold time	t_{WDH}	30	–	30	–	25	–	20	–	ns	Fig. 14-4
Wait setup time	t_{WTS}	60	–	40	–	40	–	40	–	ns	Fig. 14-5
Wait hold time	t_{WTH}	20	–	10	–	10	–	10	–	ns	Fig. 14-5

Note: * Values at maximum operating frequency

Table 14-7. Control Signal Timing

Condition A: V_{CC} = 5.0V ±10%, V_{SS} = 0V, Ø = 0.5MHz to maximum operating frequency,
Ta = –20 to 75˚C (regular specifications),
Ta = –40 to 85˚C (wide-range specifications)

Condition B: V_{CC} = 3.0V ±10%, V_{SS} = 0V, Ø = 0.5MHz to maximum operating frequency,
Ta = –20 to 75˚C

		Condition B		Condition A							
		5MHz		6MHz		8MHz		10MHz			Measurement
Item	**Symbol**	**Min**	**Max**	**Min**	**Max**	**Min**	**Max**	**Min**	**Max**	**Unit**	**conditions**
$\overline{\text{RES}}$ setup time	t_{RESS}	300	–	200	–	200	–	200	–	ns	Fig. 14-6
$\overline{\text{RES}}$ pulse width	t_{RESW}	10	–	10	–	10	–	10	–	tcyc	Fig. 14-6
$\overline{\text{NMI}}$ setup time ($\overline{\text{NMI}}$, $\overline{\text{IRQ}_0}$ to $\overline{\text{IRQ}_2}$)	t_{NMIS}	300	–	150	–	150	–	150	–	ns	Fig. 14-7
$\overline{\text{NMI}}$ hold time ($\overline{\text{NMI}}$, $\overline{\text{IRQ}_0}$ to $\overline{\text{IRQ}_2}$)	t_{NMIH}	10	–	10	–	10	–	10	–	ns	Fig. 14-7
Interrupt pulse width for recovery from software standby mode ($\overline{\text{NMI}}$, $\overline{\text{IRQ}_0}$ to $\overline{\text{IRQ}_2}$)	t_{NMIW}	300	–	200	–	200	–	200	–	ns	Fig. 14-7
Crystal oscillator settling time (reset)	t_{OSC1}	20	–	20	–	20	–	20	–	ms	Fig. 14-8
Crystal oscillator settling time (software standby)	t_{OSC2}	10	–	10	–	10	–	10	–	ms	Fig. 14-9

Table 14-8. Timing Conditions of On-Chip Supporting Modules

Condition A: V_{CC} = 5.0V ±10%, V_{SS} = 0V, Ø = 0.5MHz to maximum operating frequency,
Ta = –20 to 75˚C (regular specifications),
Ta = –40 to 85˚C (wide-range specifications)

Condition B: V_{CC} = 3.0V ±10%, V_{SS} = 0V, Ø = 0.5MHz to maximum operating frequency,
Ta = –20 to 75˚C

				Condition B		Condition A							
				5MHz		6MHz		8MHz		10MHz			Measurement
Item			Symbol	Min	Max	Min	Max	Min	Max	Min	Max	Unit	conditions
FRT	Timer output delay time		t_{FTOD}	–	150	–	100	–	100	–	100	ns	Fig. 14-10
	Timer input setup time		t_{FTIS}	80	–	50	–	50	–	50	–	ns	Fig. 14-10
	Timer clock input setup time		t_{FTCS}	80	–	50	–	50	–	50	–	ns	Fig. 14-11
	Timer clock pulse width		t_{FTCWH} t_{FTCWL}	1.5	–	1.5	–	1.5	–	1.5	–	tcyc	Fig. 14-11
TMR	Timer output delay time		t_{TMOD}	–	150	–	100	–	100	–	100	ns	Fig. 14-12
	Timer reset input setup time		t_{TMRS}	80	–	50	–	50	–	50	–	ns	Fig. 14-14
	Timer clock input setup time		t_{TMCS}	80	–	50	–	50	–	50	–	ns	Fig. 14-13
	Timer clock pulse width (single edge)		t_{TMCWH}	1.5	–	1.5	–	1.5	–	1.5	–	t_{cyc}	Fig. 14-13
	Timer clock pulse width (both edges)		t_{TMCWL}	2.5	–	2.5	–	2.5	–	2.5	–	t_{cyc}	Fig. 14-13
SCI	Input clock cycle	(Async)	t_{scyc}	4	–	4	–	4	–	4	–	t_{cyc}	Fig. 14-15
		(Sync)	t_{scyc}	6	–	6	–	6	–	6	–	t_{cyc}	Fig. 14-15
	Transmit data delay time (Sync)		t_{TXD}	–	200	–	100	–	100	–	100	ns	Fig. 14-15
	Receive data setup time (Sync)		t_{RXS}	150	–	100	–	100	–	100	–	ns	Fig. 14-15
	Receive data hold time (Sync)		t_{RXH}	150	–	100	–	100	–	100	–	ns	Fig. 14-15
	Input clock pulse width		t_{SCKW}	0.4	0.6	0.4	0.6	0.4	0.6	0.4	0.6	t_{scyc}	Fig. 14-16
Ports	Output data delay time		t_{PWD}	–	150	–	100	–	100	–	100	ns	Fig. 14-17
	Input data setup time		t_{PRS}	80	–	50	–	50	–	50	–	ns	Fig. 14-17
	Input data hold time		t_{PRH}	80	–	50	–	50	–	50	–	ns	Fig. 14-17

- **Measurement Conditions for AC Characteristics**

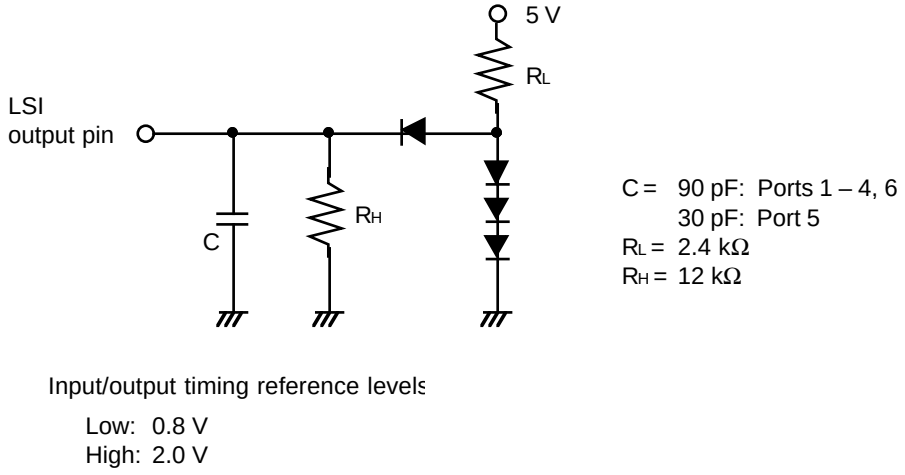

Figure 14-3. Output Load Circuit

14.2.3 A/D Converter Characteristics

Table 14-9 lists the characteristics of the on-chip A/D converter.

Table 14-9. A/D Converter Characteristics

Condition A: V_{CC} = AV_{CC} = 5.0V ±10%, V_{SS} = AV_{SS} = 0V, Ø = 0.5MHz to maximum operating frequency, Ta = –20 to 75˚C (regular specifications), Ta = –40 to 85˚C (wide-range specifications)

Condition B: V_{CC} = 3.0V ±10%, AV_{CC} = 5.0V ±10%, V_{SS} = AV_{SS} = 0V, Ø = 0.5MHz to maximum operating frequency, Ta = –20 to 75˚C

	Condition B			Condition A									
	5MHz			6MHz			8MHz			10MHz			
Item	**Min**	**Typ**	**Max**	**Min**	**Typ**	**Max**	**Min**	**Typ**	**Max**	**Min**	**Typ**	**Max**	**Unit**
Resolution	8	8	8	8	8	8	8	8	8	8	8	8	Bits
Conversion time (single mode)*	—	—	24.4	—	—	20.4	—	—	15.25	—	—	12.2	µs
Analog input capacitance	—	—	20	—	—	20	—	—	20	—	—	20	pF
Allowable signal source impedance	—	—	10	—	—	10	—	—	10	—	—	10	kΩ
Nonlinearity error	—	—	±1	—	—	±1	—	—	±1	—	—	±1	LSB
Offset error	—	—	±1	—	—	±1	—	—	±1	—	—	±1	LSB
Full-scale error	—	—	±1	—	—	±1	—	—	±1	—	—	±1	LSB
Quantizing error	—	—	±0.5	—	—	±0.5	—	—	±0.5	—	—	±0.5	LSB
Absolute accuracy	—	—	±1.5	—	—	±1.5	—	—	±1.5	—	—	±1.5	LSB

Note: * At maximum operating frequency.

14.3 MCU Operational Timing

This section provides the following timing charts:

14.3.1 Bus Timing	Figures 14-4 to 14-5
14.3.2 Control Signal Timing	Figures 14-6 to 14-9
14.3.3 16-Bit Free-Running Timer Timing	Figures 14-10 to 14-11
14.3.4 8-Bit Timer Timing	Figures 14-12 to 14-14
14.3.5 SCI Timing	Figures 14-15 to 14-16
14.3.6 I/O Port Timing	Figure 14-17

14.3.1 Bus Timing

(1) Basic Bus Cycle (without Wait States) in Expanded Modes

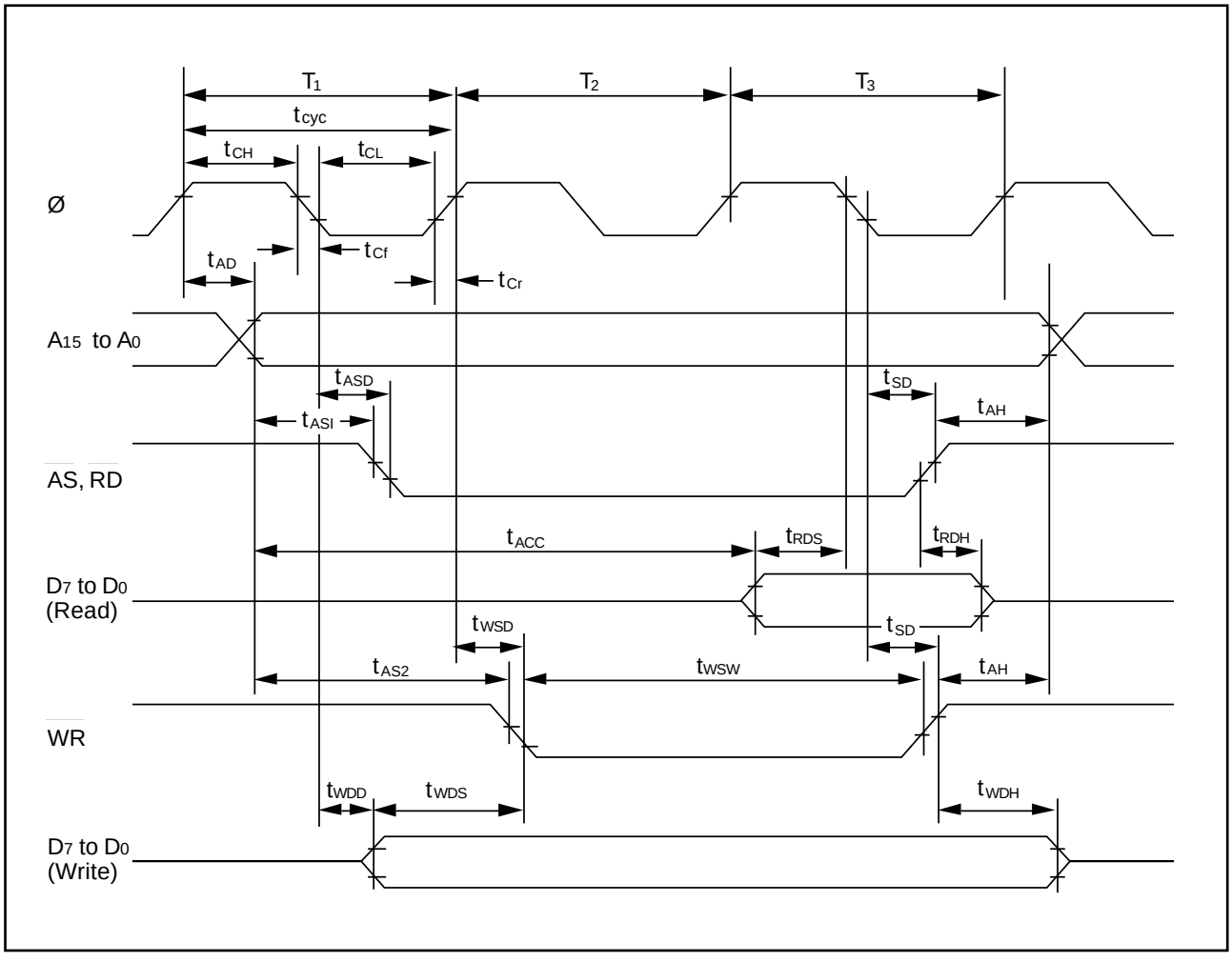

Figure 14-4. Basic Bus Cycle (without Wait States) in Expanded Modes

(2) Basic Bus Cycle (with 1 Wait State) in Expanded Modes

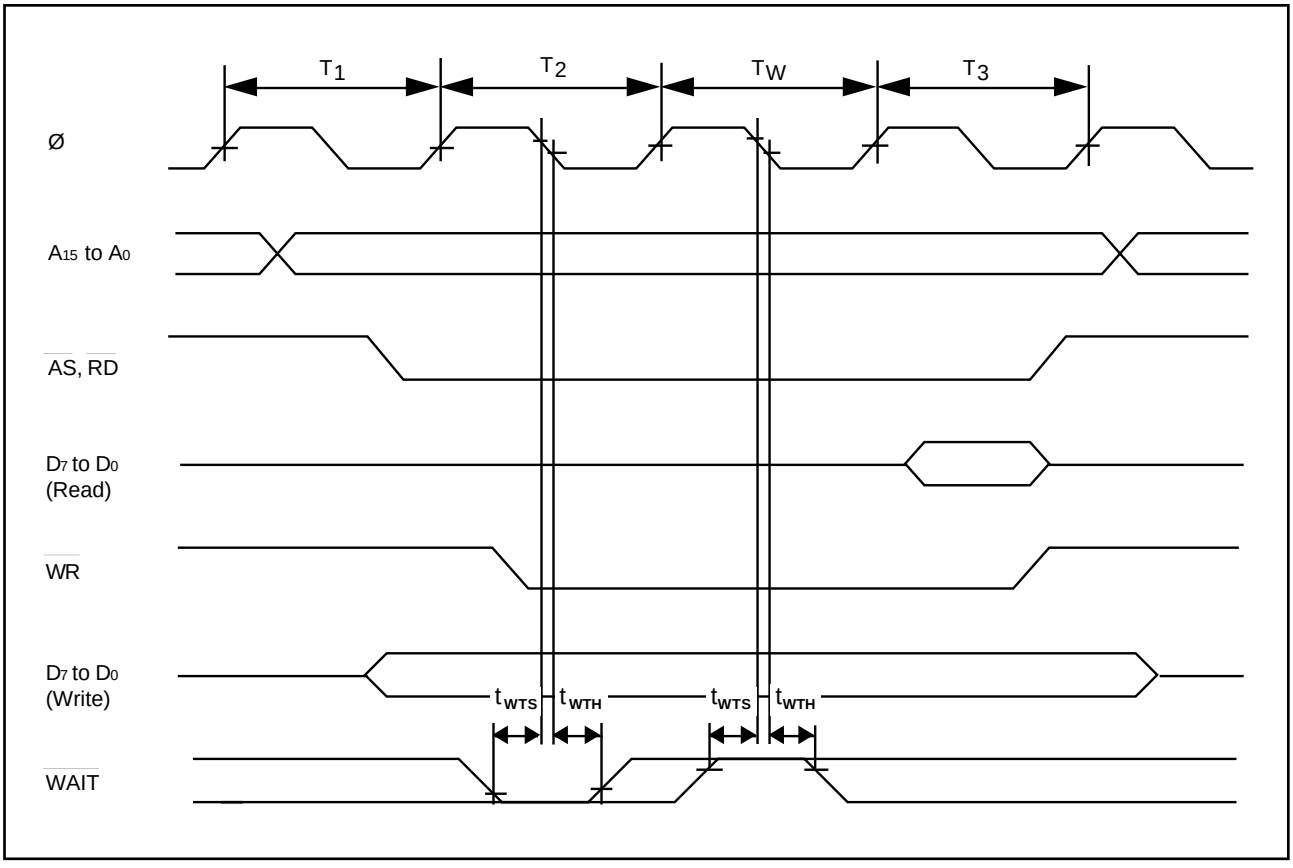

Figure 14-5. Basic Bus Cycle (with 1 Wait State) in Expanded Modes (Modes 1 and 2)

14.3.2 Control Signal Timing

(1) Reset Input Timing

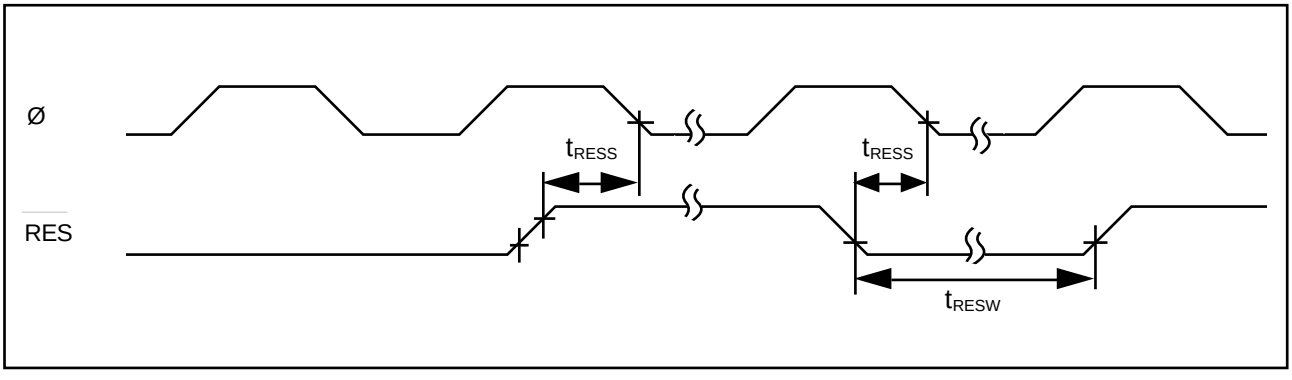

Figure 14-6. Reset Input Timing

(2) Interrupt Input Timing

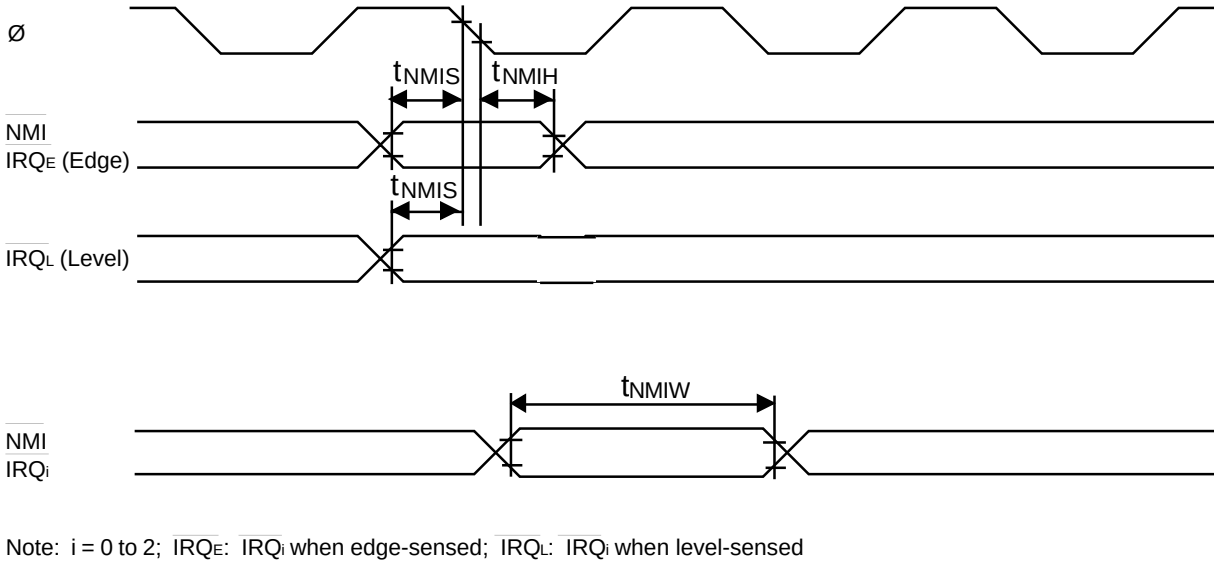

Note: i = 0 to 2; $\overline{IRQ_E}$: $\overline{IRQ_i}$ when edge-sensed; $\overline{IRQ_L}$: $\overline{IRQ_i}$ when level-sensed

Figure 14-7. Interrupt Input Timing

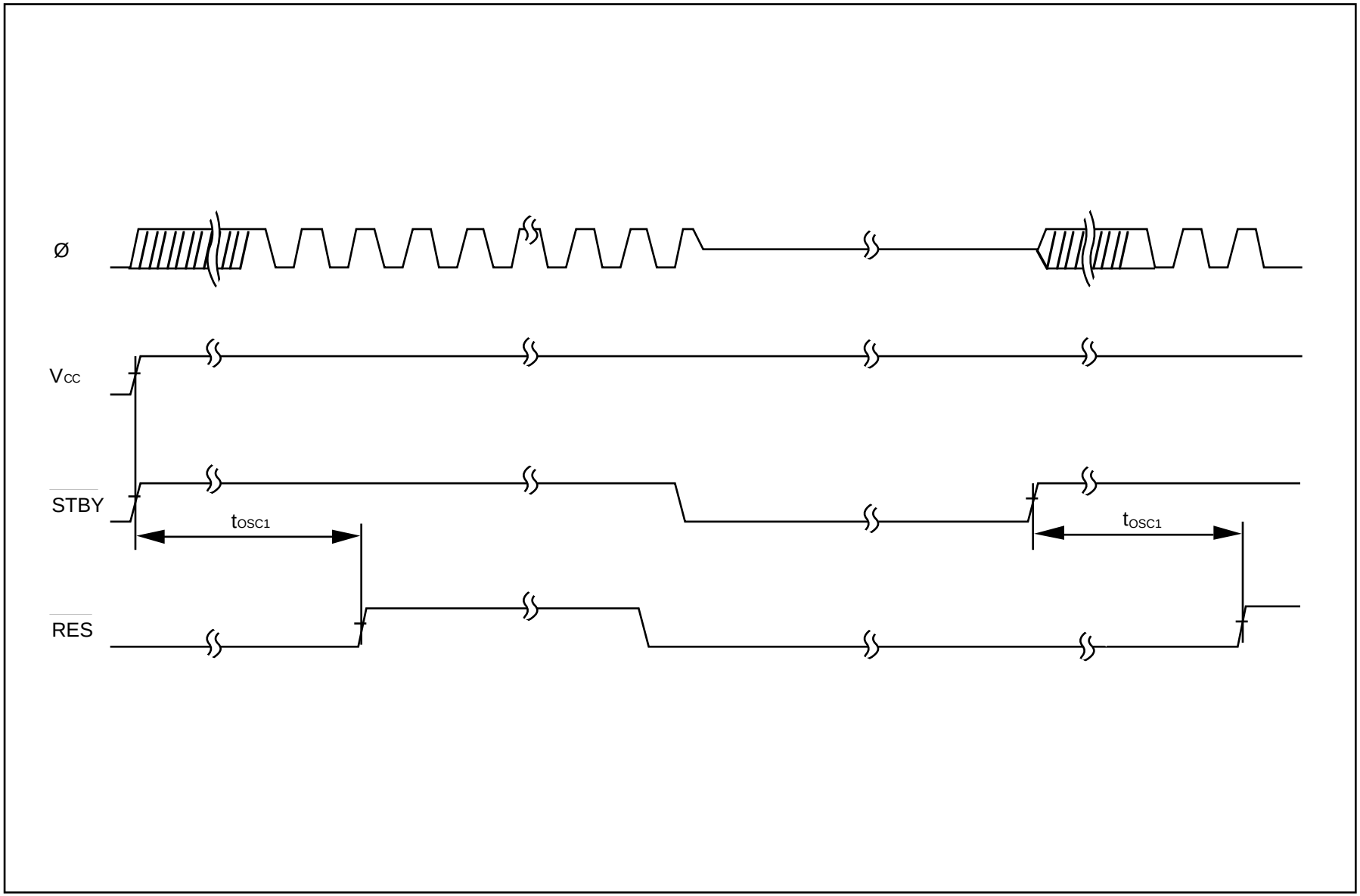

Figure 14-8. Clock Setting Timing

(4) Clock Settling Timing for Recovery from Software Standby Mode

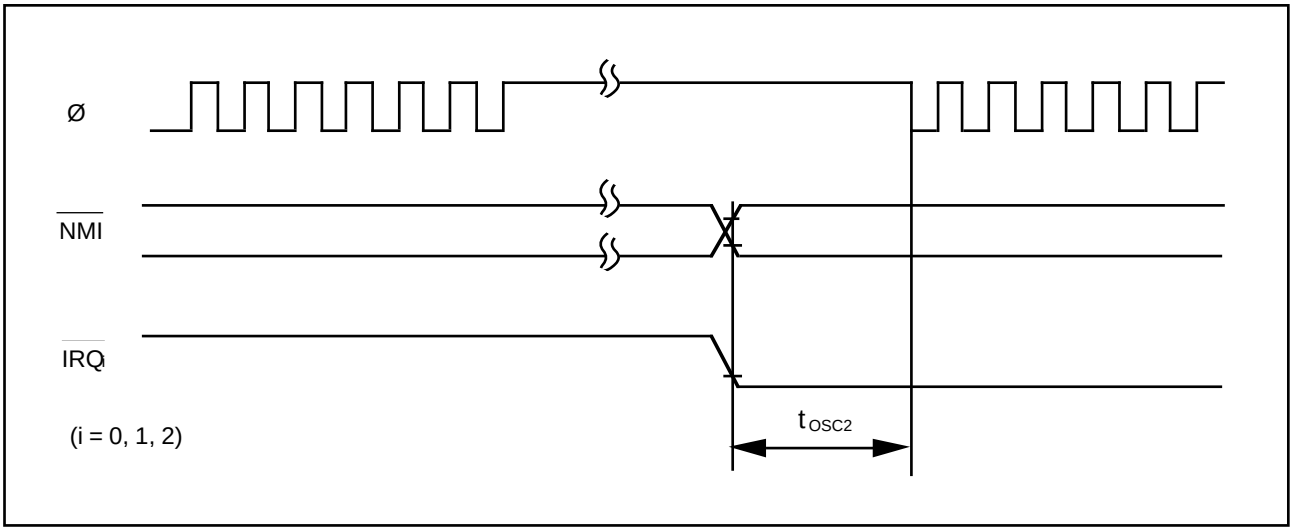

Figure 14-9. Clock Settling Timing for Recovery from Software Standby Mode

14.3.3 16-Bit Free-Running Timer Timing

(1) Free-Running Timer Input/Output Timing

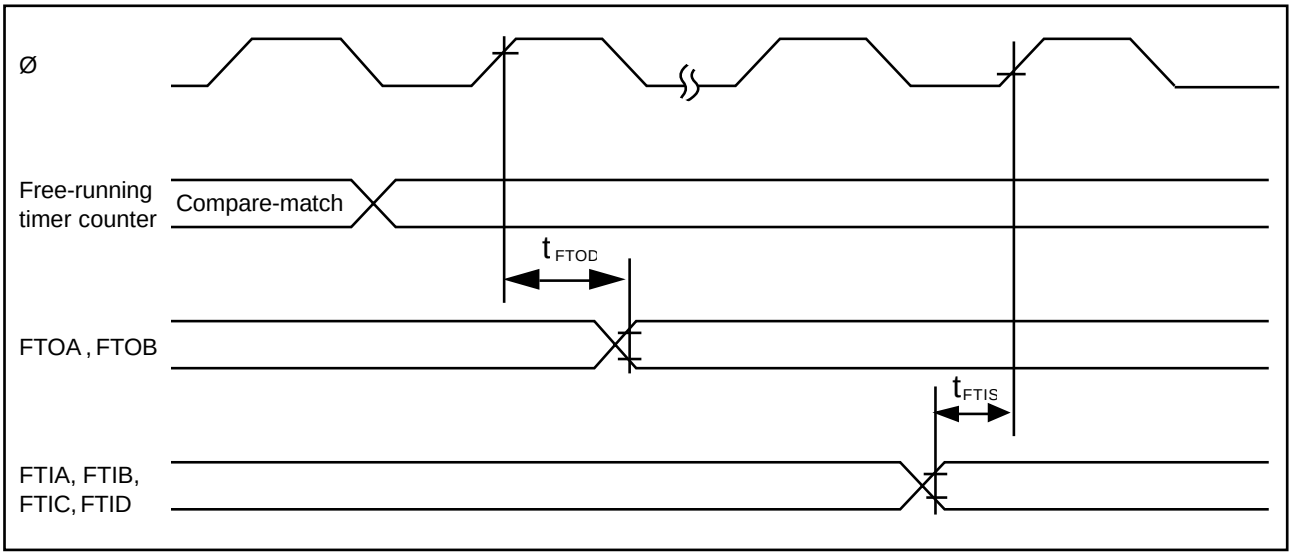

Figure 14-10. Free-Running Timer Input/Output Timing

(2) External Clock Input Timing for Free-Running Timer

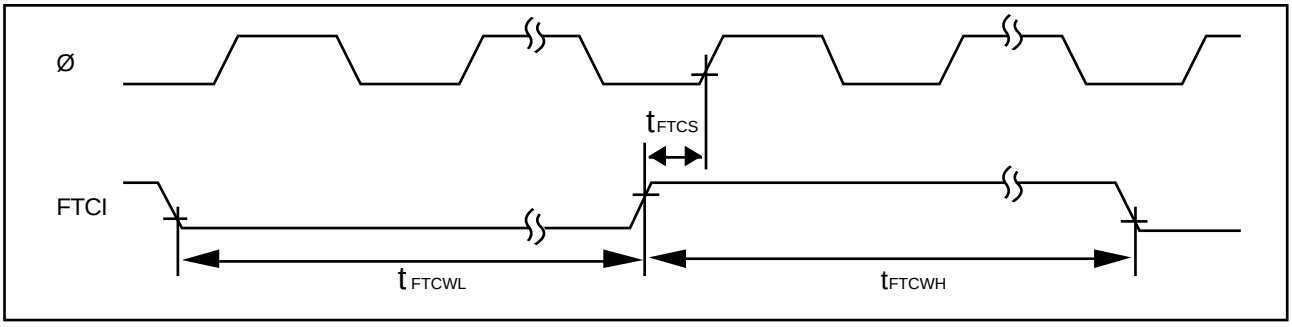

Figure 14-11. External Clock Input Timing for Free-Running Timer

14.3.4 8-Bit Timer Timing

(1) 8-Bit Timer Output Timing

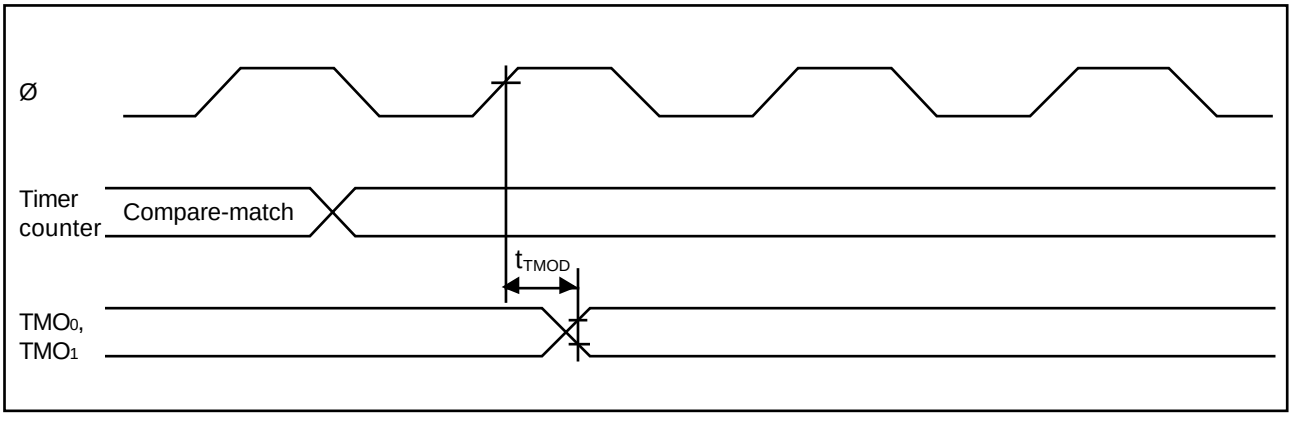

Figure 14-12. 8-Bit Timer Output Timing

(2) 8-Bit Timer Clock Input Timing

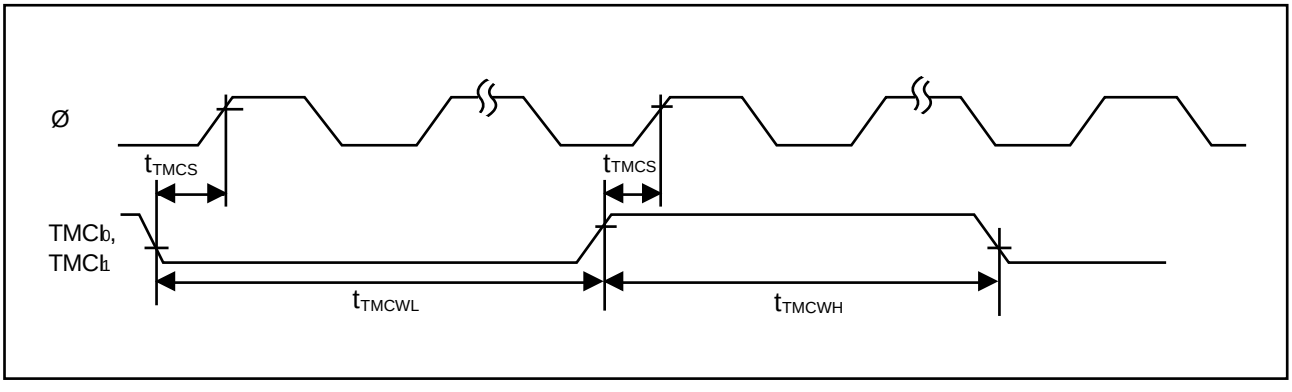

Figure 14-13. 8-Bit Timer Clock Input Timing

(3) 8-Bit Timer Reset Input Timing

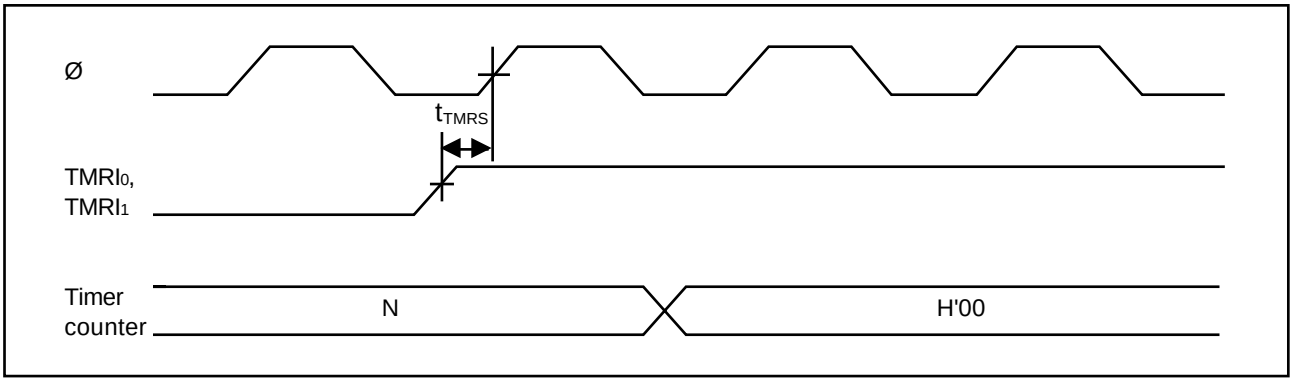

Figure 14-14. 8-Bit Timer Reset Input Timing

14.3.5 Serial Communication Interface Timing

(1) SCI Input/Output Timing

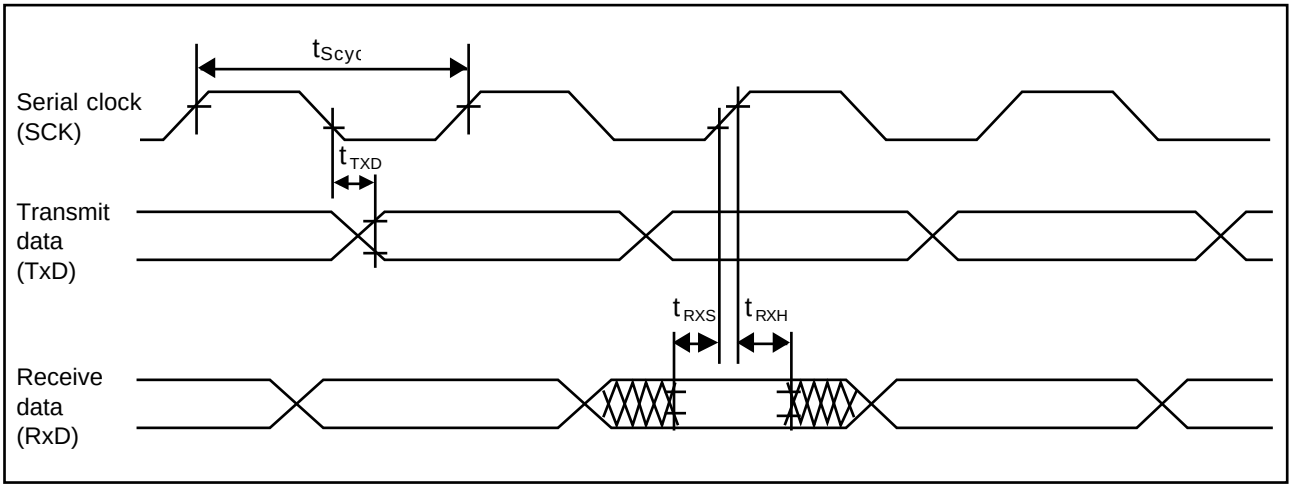

Figure 14-15. SCI Input/Output Timing (Synchronous Mode)

(2) SCI Input Clock Timing

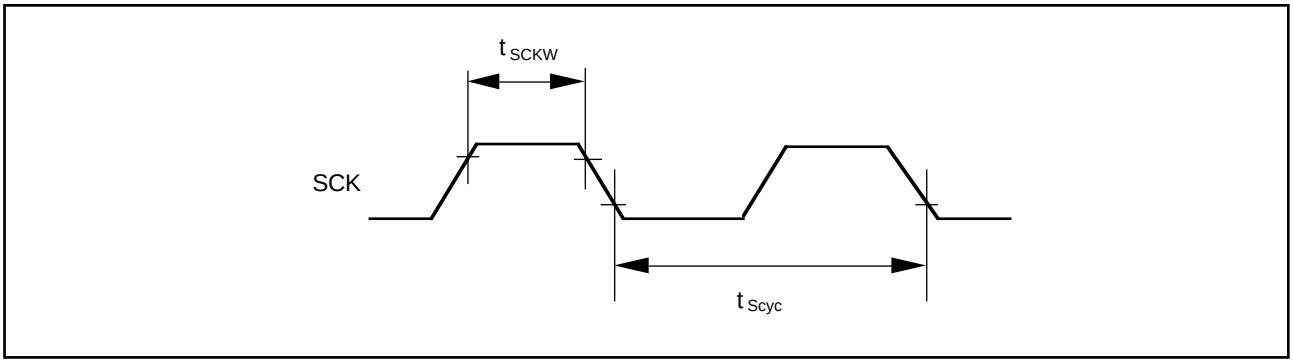

Figure 14-16. SCI Input Clock Timing

14.3.6 I/O Port Timing

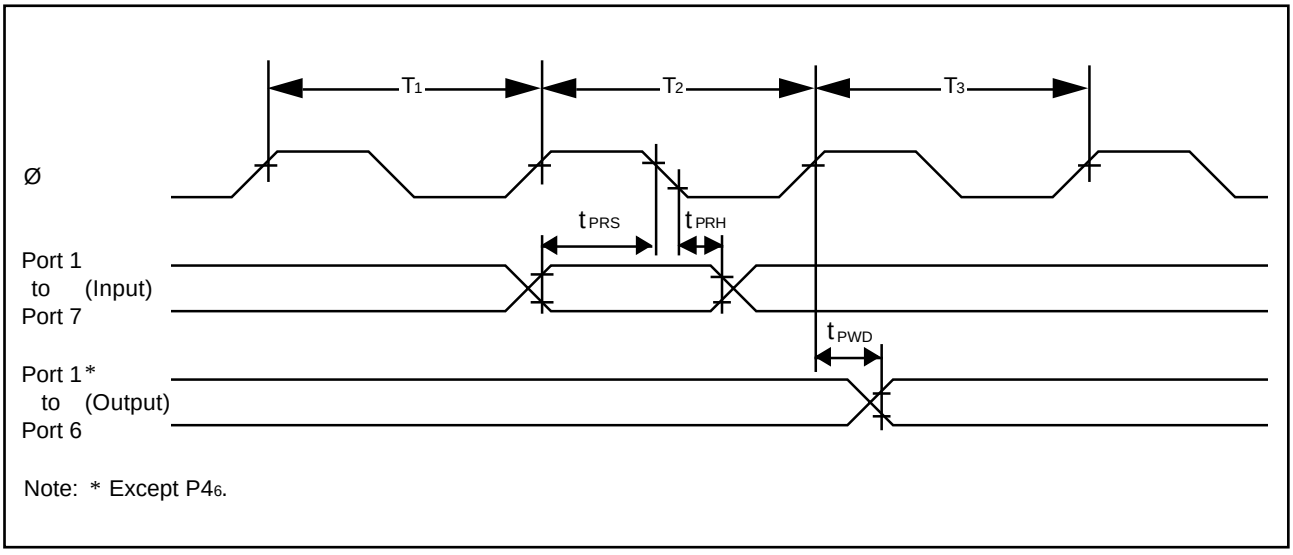

Figure 14-17. I/O Port Input/Output Timing

Appendix A. CPU Instruction Set

A.1 Instruction Set List

Operation Notation

Rd8/16	General register (destination) (8 or 16 bits)
Rs8/16	General register (source) (8 or 16 bits)
Rn8/16	General register (8 or 16 bits)
CCR	Condition code register
N	N (negative) flag in CCR
Z	Z (zero) flag in CCR
V	V (overflow) flag in CCR
C	C (carry) flag in CCR
PC	Program counter
SP	Stack pointer
#xx:3/8/16	Immediate data (3, 8, or 16 bits)
d:8/16	Displacement (8 or 16 bits)
@aa:8/16	Absolute address (8 or 16 bits)
+	Addition
–	Subtraction
×	Multiplication
÷	Division
∧	AND logical
∨	OR logical
⊕	Exclusive OR logical
→	Move
—	Not

Condition Code Notation

↕	Modified according to the instruction result
*	Undetermined (unpredictable)
0	Always cleared to “0”
—	Not affected by the instruction result

A.2 Operation Code Map

Table A-2 is a map of the operation codes contained in the first byte of the instruction code (bits 15 to 8 of the first instruction word).

Some pairs of instructions have identical first bytes. These instructions are differentiated by the first bit of the second byte (bit 7 of the first instruction word).

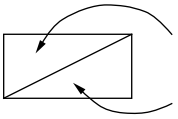

Instruction when first bit of byte 2 (bit 7 of first instruction word) is “0.”
Instruction when first bit of byte 2 (bit 7 of first instruction word) is “1.”

Table A-2. Operation Code Map

HI \ LO	0	1	2	3	4	5	6	7	8	9	A	B	C	D	E	F
0	NOP	SLEEP	STC	LDC	ORC	XORC	ANDC	LDC	ADD		INC	ADDS	MOV		ADDX	DAA
1	SHLL / SHAL	SHLR / SHAR	ROTXL / ROTL	ROTXR / ROTR	OR	XOR	AND	NOT / NEG	SUB		DEC	SUBS	CMP		SUBX	DAS
2	MOV															
3																
4	BRA*2	BRN*2	BHI	BLS	BCC*2	BCS*2	BNE	BEQ	BVC	BVS	BPL	BMI	BGE	BLT	BGT	BLE
5	MULXU	DIVXU			RTS	BSR	RTE			JMP				JSR		
6	BSET	BNOT	BCLR	BTST				BST / BIST	MOV *1							
7					BOR / BIOR	BXOR / BIXOR	BAND / BIAND	BLD / BILD		MOV		EEPMOV	Bit manipulation instruction			
8	ADD															
9	ADDX															
A	CMP															
B	SUBX															
C	OR															
D	XOR															
E	AND															
F	MOV															

Notes: *1 The MOVFPE and MOVTPE instructions are identical to MOV instructions in the first byte and first bit of the second byte (bits 15 to 7 of the instruction word).
The PUSH and POP instructions are identical in machine language to MOV instructions.

*2 The BT, BF, BHS, and BLO instructions are identical in machine language to BRA, BRN, BCC, and BCS, respectively.

A.3 Number of States Required for Execution

The tables below can be used to calculate the number of states required for instruction execution. Table A-3 indicates the number of states required for each cycle (instruction fetch, branch address read, stack operation, byte data access, word data access, internal operation). Table A-4 indicates the number of cycles of each type occurring in each instruction. The total number of states required for execution of an instruction can be calculated from these two tables as follows:

Execution states = $I \times S_I + J \times S_J + K \times S_K + L \times S_L + M \times S_M + N \times S_N$

Examples: Mode 1 (on-chip ROM disabled), stack located in external memory, 1 wait state inserted in external memory access.

1. BSET #0, @FFC7
   From table A-4: I = L = 2, J = K = M = N= 0
   From table A-3: $S_I = 8$, $S_L = 3$
   Number of states required for execution: $2 \times 8 + 2 \times 3 = 22$

2. JSR @@30
   From table A-4: I = 2, J = K = 1, L = M = N = 0
   From table A-3: $S_I = S_J = S_K = 8$
   Number of states required for execution: $2 \times 8 + 1 \times 8 + 1 \times 8 = 32$

Table A-3. Number of States Taken by Each Cycle in Instruction Execution

Execution status (instruction cycle)		**Access location**		
		On-chip memory	**On-chip reg. field**	**External memory**
Instruction fetch	S_I	2	6	6 + 2m
Branch address read	S_J			
Stack operation	S_K			
Byte data access	S_L		3	3 + m
Word data access	S_M		6	6 + 2m
Internal operation	S_N		1	

Note: m: Number of wait states inserted in access to external device.

Table A-4. Number of Cycles in Each Instruction

Instruction	Mnemonic	Instruction fetch I	Branch addr. read J	Stack operation K	Byte data access L	Word data access M	Internal operation N
ADD	ADD.B #xx:8, Rd	1					
	ADD.B Rs, Rd	1					
	ADD.W Rs, Rd	1					
ADDS	ADDS.W #1/2, Rd	1					
ADDX	ADDX.B #xx:8, Rd	1					
	ADDX.B Rs, Rd	1					
AND	AND.B #xx:8, Rd	1					
	AND.B Rs, Rd	1					
ANDC	ANDC #xx:8, CCR	1					
BAND	BAND #xx:3, Rd	1					
	BAND #xx:3, @Rd	2			1		
	BAND #xx:3, @aa:8	2			1		
Bcc	BRA d:8 (BT d:8)	2					
	BRN d:8 (BF d:8)	2					
	BHI d:8	2					
	BLS d:8	2					
	BCC d:8 (BHS d:8)	2					
	BCS d:8 (BLO d:8)	2					
	BNE d:8	2					
	BEQ d:8	2					
	BVC d:8	2					
	BVS d:8	2					
	BPL d:8	2					
	BMI d:8	2					
	BGE d:8	2					
	BLT d:8	2					
	BGT d:8	2					
	BLE d:8	2					
BCLR	BCLR #xx:3, Rd	1					
	BCLR #xx:3, @Rd	2			2		
	BCLR #xx:3, @aa:8	2			2		
	BCLR Rn, Rd	1					
	BCLR Rn, @Rd	2			2		
	BCLR Rn, @aa:8	2			2		

Note: All values left blank are zero.

Table A-4. Number of Cycles in Each Instruction (cont.)

Instruction	Mnemonic	Instruction fetch I	Branch addr. read J	Stack operation K	Byte data access L	Word data access M	Internal operation N
BIAND	BIAND #xx:3, Rd	1					
	BIAND #xx:3, @Rd	2			1		
	BIAND #xx:3, @aa:8	2			1		
BILD	BILD #xx:3, Rd	1					
	BILD #xx:3, @Rd	2			1		
	BILD #xx:3, @aa:8	2			1		
BIOR	BIOR #xx:3 Rd	1					
	BIOR #xx:3 @Rd	2			1		
	BIOR #xx:3 @aa:8	2			1		
BIST	BIST #xx:3, Rd	1					
	BIST #xx:3, @Rd	2			2		
	BIST #xx:3, @aa:8	2			2		
BIXOR	BIXOR #xx:3, Rd	1					
	BIXOR #xx:3, @Rd	2			1		
	BIXOR #xx:3, @aa:8	2			1		
BLD	BLD #xx:3, Rd	1					
	BLD #xx:3, @Rd	2			1		
	BLD #xx:3, @aa:8	2			1		
BNOT	BNOT #xx:3, Rd	1					
	BNOT #xx:3, @Rd	2			2		
	BNOT #xx:3, @aa:8	2			2		
	BNOT Rn, Rd	1					
	BNOT Rn, @Rd	2			2		
	BNOT Rn, @aa:8	2			2		
BOR	BOR #xx:3, Rd	1					
	BOR #xx:3, @Rd	2			1		
	BOR #xx:3, @aa:8	2			1		
BSET	BSET #xx:3, Rd	1					
	BSET #xx:3, @Rd	2			2		
	BSET #xx:3, @aa:8	2			2		
	BSET Rn, Rd	1					
	BSET Rn, @Rd	2			2		
	BSET Rn, @aa:8	2			2		

Note: All values left blank are zero.

Table A-4. Number of Cycles in Each Instruction (cont.)

Instruction	Mnemonic	Instruction fetch I	Branch addr. read J	Stack operation K	Byte data access L	Word data access M	Internal operation N
BSR	BSR d:8	2		1			
BST	BST #xx:3, Rd	1					
	BST #xx:3, @Rd	2			2		
	BST #xx:3, @aa:8	2			2		
BTST	BTST #xx:3, Rd	1					
	BTST #xx:3, @Rd	2			1		
	BTST #xx:3, @aa:8	2			1		
	BTST Rn, Rd	1					
	BTST Rn, @Rd	2			1		
	BTST Rn, @aa:8	2			1		
BXOR	BXOR #xx:3, Rd	1					
	BXOR #xx:3, @Rd	2			1		
	BXOR #xx:3, @aa:8	2			1		
CMP	CMP.B #xx:8, Rd	1					
	CMP.B Rs, Rd	1					
	CMP.W Rs, Rd	1					
DAA	DAA.B Rd	1					
DAS	DAS.B Rd	1					
DEC	DEC.B Rd	1					
DIVXU	DIVXU.B Rs, Rd	1					12
EEPMOV	EEPMOV	2			2n+2*		1
INC	INC.B Rd	1					
JMP	JMP @Rn	2					
	JMP @aa:16	2					2
	JMP @@aa:8	2	1				2
JSR	JSR @Rn	2		1			
	JSR @aa:16	2		1			2
	JSR @@aa:8	2	1	1			
LDC	LDC #xx:8, CCR	1					
	LDC Rs, CCR	1					
MOV	MOV.B #xx:8, Rd	1					
	MOV.B Rs, Rd	1					
	MOV.B @Rs, Rd	1			1		
	MOV.B @(d:16,Rs), Rd	2			1		

Notes: All values left blank are zero.

* n: Initial value in R4L. Source and destination are accessed n + 1 times each.

Table A-4. Number of Cycles in Each Instruction (cont.)

Instruction	Mnemonic	Instruction fetch I	Branch addr. read J	Stack operation K	Byte data access L	Word data access M	Internal operation N
MOV	MOV.B @Rs+, Rd	1			1		2
	MOV.B @aa:8, Rd	1			1		
	MOV.B @aa:16, Rd	2			1		
	MOV.B Rs, @Rd	1			1		
	MOV.B Rs, @(d:16, Rd)	2			1		
	MOV.B Rs, @–Rd	1			1		2
	MOV.B Rs, @aa:8	1			1		
	MOV.B Rs, @aa:16	2			1		
	MOV.W #xx:16, Rd	2					
	MOV.W Rs, Rd	1					
	MOV.W @Rs, Rd	1				1	
	MOV.W @(d:16, Rs), Rd	2				1	
	MOV.W @Rs+, Rd	1				1	2
	MOV.W @aa:16, Rd	2				1	
	MOV.W Rs, @Rd	1				1	
	MOV.W Rs, @(d:16, Rd)	2				1	
	MOV.W Rs, @–Rd	1				1	2
	MOV.W Rs, @aa:16	2				1	
MOVFPE	MOVFPE @aa:16, Rd	Not supported					
MOVTPE	MOVTPE.Rs, @aa:16						
MULXU	MULXU.Rs, Rd	1					12
NEG	NEG.B Rd	1					
NOP	NOP	1					
NOT	NOT.B Rd	1					
OR	OR.B #xx:8, Rd	1					
	OR.B Rs, Rd	1					
ORC	ORC #xx:8, CCR	1					
POP	POP Rd	1			1		2
PUSH	PUSH Rd	1			1		2
ROTL	ROTL.B Rd	1					
ROTR	ROTR.B Rd	1					
ROTXL	ROTXL.B Rd	1					
ROTXR	ROTXR.B Rd	1					

Note: All values left blank are zero.

Table A-4. Number of Cycles in Each Instruction (cont.)

Instruction	Mnemonic	Instruction fetch I	Branch addr. read J	Stack operation K	Byte data access L	Word data access M	Internal operation N
RTE	RTE	2		2			2
RTS	RTS	2		1			2
SHAL	SHAL.B Rd	1					
SHAR	SHAR.B Rd	1					
SHLL	SHLL.B Rd	1					
SHLR	SHLR.B Rd	1					
SLEEP	SLEEP	1					
STC	STC CCR, Rd	1					
SUB	SUB.B Rs, Rd	1					
	SUB.W Rs, Rd	1					
SUBS	SUBS.W #1/2, Rd	1					
SUBX	SUBX.B #xx:8, Rd	1					
	SUBX.B Rs, Rd	1					
XOR	XOR.B #xx:8, Rd	1					
	XOR.B Rs, Rd	1					
XORC	XORC #xx:8, CCR	1					

Note: All values left blank are zero.

Appendix B. Register Field

B.1 Register Addresses and Bit Names

Addr. (last byte)	Register name	Bit names								Module
		Bit 7	Bit 6	Bit 5	Bit 4	Bit 3	Bit 2	Bit 1	Bit 0	
H'80										External addresses (in expanded modes)
H'81										
H'82										
H'83										
H'84										
H'85										
H'86										
H'87										
H'88	—	—	—	—	—	—	—	—	—	—
H'89	—	—	—	—	—	—	—	—	—	
H'8A	—	—	—	—	—	—	—	—	—	
H'8B	—	—	—	—	—	—	—	—	—	
H'8C	—	—	—	—	—	—	—	—	—	
H'8D	—	—	—	—	—	—	—	—	—	
H'8E	—	—	—	—	—	—	—	—	—	
H'8F	—	—	—	—	—	—	—	—	—	
H'90	TIER	ICIAE	ICIBE	ICICE	ICIDE	OCIAE	OCIBE	OVIE	—	FRT
H'91	TCSR	ICFA	ICFB	ICFC	ICFD	OCFA	OCFB	OVF	CCLRA	
H'92	FRC (H)									
H'93	FRC (L)									
H'94	OCRA (H)									
	OCRB (H)									
H'95	OCRA (L)									
	OCRB (L)									
H'96	TCR	IEDGA	IEDGB	IEDGC	IEDGD	BUFEA	BUFEB	CKS1	CKS0	
H'97	TOCR	—	—	—	OCRS	OEA	OEB	OLVLA	OLVLB	
H'98	ICRA (H)									
H'99	ICRA (L)									
H'9A	ICRB (H)									
H'9B	ICRB (L)									
H'9C	ICRC (H)									
H'9D	ICRC (L)									
H'9E	ICRD (H)									
H'9F	ICRD (L)									

(Continued on next page)

Notes: FRT: Free-Running Timer

(Continued from previous page)

Addr. (last byte)	Register name	Bit names								Module
		Bit 7	Bit 6	Bit 5	Bit 4	Bit 3	Bit 2	Bit 1	Bit 0	
H'A0	—	—	—	—	—	—	—	—	—	
H'A1	—	—	—	—	—	—	—	—	—	
H'A2	—	—	—	—	—	—	—	—	—	
H'A3	—	—	—	—	—	—	—	—	—	
H'A4	—	—	—	—	—	—	—	—	—	
H'A5	—	—	—	—	—	—	—	—	—	
H'A6	—	—	—	—	—	—	—	—	—	
H'A7	—	—	—	—	—	—	—	—	—	
H'A8	—	—	—	—	—	—	—	—	—	
H'A9	—	—	—	—	—	—	—	—	—	
H'AA	—	—	—	—	—	—	—	—	—	
H'AB	—	—	—	—	—	—	—	—	—	
H'AC	P1PCR	$P1_7$PCR	$P1_6$PCR	$P1_5$PCR	$P1_4$PCR	$P1_3$PCR	$P1_2$PCR	$P1_1$PCR	$P1_0$PCR	Port 1
H'AD	P2PCR	$P2_7$PCR	$P2_6$PCR	$P2_5$PCR	$P2_4$PCR	$P2_3$PCR	$P2_2$PCR	$P2_1$PCR	$P2_0$PCR	Port 2
H'AE	P3PCR	$P3_7$PCR	$P3_6$PCR	$P3_5$PCR	$P3_4$PCR	$P3_3$PCR	$P3_2$PCR	$P3_1$PCR	$P3_0$PCR	Port 3
H'AF	—	—	—	—	—	—	—	—	—	—
H'B0	P1DDR	$P1_7$DDR	$P1_6$DDR	$P1_5$DDR	$P1_4$DDR	$P1_3$DDR	$P1_2$DDR	$P1_1$DDR	$P1_0$DDR	Port 1
H'B1	P2DDR	$P2_7$DDR	$P2_6$DDR	$P2_5$DDR	$P2_4$DDR	$P2_3$DDR	$P2_2$DDR	$P2_1$DDR	$P2_0$DDR	Port 2
H'B2	P1DR	$P1_7$	$P1_6$	$P1_5$	$P1_4$	$P1_3$	$P1_2$	$P1_1$	$P1_0$	Port 1
H'B3	P2DR	$P2_7$	$P2_6$	$P2_5$	$P2_4$	$P2_3$	$P2_2$	$P2_1$	$P2_0$	Port 2
H'B4	P3DDR	$P3_7$DDR	$P3_6$DDR	$P3_5$DDR	$P3_4$DDR	$P3_3$DDR	$P3_2$DDR	$P3_1$DDR	$P3_0$DDR	Port 3
H'B5	P4DDR	$P4_7$DDR	$P4_6$DDR	$P4_5$DDR	$P4_4$DDR	$P4_3$DDR	$P4_2$DDR	$P4_1$DDR	$P4_0$DDR	Port 4
H'B6	P3DR	$P3_7$	$P3_6$	$P3_5$	$P3_4$	$P3_3$	$P3_2$	$P3_1$	$P3_0$	Port 3
H'B7	P4DR	$P4_7$	$P4_6$	$P4_5$	$P4_4$	$P4_3$	$P4_2$	$P4_1$	$P4_0$	Port 4
H'B8	P5DDR	—	—	—	—	—	$P5_2$DDR	$P5_1$DDR	$P5_0$DDR	Port 5
H'B9	P6DDR	$P6_7$DDR	$P6_6$DDR	$P6_5$DDR	$P6_4$DDR	$P6_3$DDR	$P6_2$DDR	$P6_1$DDR	$P6_0$DDR	Port 6
H'BA	P5DR	—	—	—	—	—	$P5_2$	$P5_1$	$P5_0$	Port 5
H'BB	P6DR	$P6_7$	$P6_6$	$P6_5$	$P6_4$	$P6_3$	$P6_2$	$P6_1$	$P6_0$	Port 6
H'BC	—	—	—	—	—	—	—	—	—	—
H'BD	—	—	—	—	—	—	—	—	—	—
H'BE	P7DR	$P7_7$	$P7_6$	$P7_5$	$P7_4$	$P7_3$	$P7_2$	$P7_1$	$P7_0$	Port 7
H'BF	—	—	—	—	—	—	—	—	—	—

(Continued on next page)

(Continued from preceding page)

Addr. (last byte)	Register name	Bit names Bit 7	Bit 6	Bit 5	Bit 4	Bit 3	Bit 2	Bit 1	Bit 0	Module
H'C0	—	—	—	—	—	—	—	—	—	—
H'C1	—	—	—	—	—	—	—	—	—	—
H'C2	—	—	—	—	—	—	—	—	—	—
H'C3	STCR	—	—	—	—	—	MPE	ICKS1	ICKS0	
H'C4	SYSCR	SSBY	STS2	STS1	STS0	—	NMIEG	—	RAME	
H'C5	MDCR	—	—	—	—	—	—	MDS1	MDS0	
H'C6	ISCR	—	—	—	—	—	IRQ_2SC	IRQ_1SC	IRQ_0SC	
H'C7	IER	—	—	—	—	—	IRQ_2E	IRQ_1E	IRQ_0E	
H'C8	TCR	CMIEB	CMIEA	OVIE	CCLR1	CCLR0	CKS2	CKS1	CKS0	TMR0
H'C9	TCSR	CMFB	CMFA	OVF	—	OS3	OS2	OS1	OS0	
H'CA	TCORA									
H'CB	TCORB									
H'CC	TCNT									
H'CD	—	—	—	—	—	—	—	—	—	
H'CE	—	—	—	—	—	—	—	—	—	
H'CF	—	—	—	—	—	—	—	—	—	
H'D0	TCR	CMIEB	CMIEA	OVIE	CCLR1	CCLR0	CKS2	CKS1	CKS0	TMR1
H'D1	TCSR	CMFB	CMFA	OVF	—	OS3	OS2	OS1	OS0	
H'D2	TCORA									
H'D3	TCORB									
H'D4	TCNT									
H'D5	—	—	—	—	—	—	—	—	—	
H'D6	—	—	—	—	—	—	—	—	—	
H'D7	—	—	—	—	—	—	—	—	—	
H'D8	SMR	$C/\overline{A}$	CHR	PE	$O/\overline{E}$	STOP	MP	CKS1	CKS0	SCI
H'D9	BRR									
H'DA	SCR	TIE	RIE	TE	RE	MPIE	TEIE	CKE1	CKE0	
H'DB	TDR									
H'DC	SSR	TDRE	RDRF	ORER	FER	PER	TEND	MPB	MPBT	
H'DD	RDR									
H'DE	—	—	—	—	—	—	—	—	—	
H'DF	—	—	—	—	—	—	—	—	—	

(Continued on next page)

Notes: TMR0: 8-Bit Timer channel 0
TMR1: 8-Bit Timer channel 1
SCI: Serial Communication Interface

(Continued from preceding page)

Addr. (last byte)	Register name	Bit names								Module
		Bit 7	Bit 6	Bit 5	Bit 4	Bit 3	Bit 2	Bit 1	Bit 0	
H'E0	ADDRA									A/D
H'E1	—	—	—	—	—	—	—	—	—	
H'E2	ADDRB									
H'E3	—	—	—	—	—	—	—	—	—	
H'E4	ADDRC									
H'E5	—	—	—	—	—	—	—	—	—	
H'E6	ADDRD									
H'E7	—	—	—	—	—	—	—	—	—	
H'E8	ADCSR	ADF	ADIE	ADST	SCAN	CKS	CH2	CH1	CH0	
H'E9	—	—	—	—	—	—	—	—	—	
H'EA	ADCR	TRGE	—	—	—	—	—	—	CHS	
H'EB	—	—	—	—	—	—	—	—	—	
H'EC	—	—	—	—	—	—	—	—	—	—
H'ED	—	—	—	—	—	—	—	—	—	
H'EE	—	—	—	—	—	—	—	—	—	
H'EF	—	—	—	—	—	—	—	—	—	
H'F0	—	—	—	—	—	—	—	—	—	—
H'F1	—	—	—	—	—	—	—	—	—	
H'F2	—	—	—	—	—	—	—	—	—	
H'F3	—	—	—	—	—	—	—	—	—	
H'F4	—	—	—	—	—	—	—	—	—	
H'F5	—	—	—	—	—	—	—	—	—	
H'F6	—	—	—	—	—	—	—	—	—	
H'F7	—	—	—	—	—	—	—	—	—	
H'F8	—	—	—	—	—	—	—	—	—	
H'F9	—	—	—	—	—	—	—	—	—	
H'FA	—	—	—	—	—	—	—	—	—	
H'FB	—	—	—	—	—	—	—	—	—	
H'FC	—	—	—	—	—	—	—	—	—	
H'FD	—	—	—	—	—	—	—	—	—	
H'FE	—	—	—	—	—	—	—	—	—	
H'FF	—	—	—	—	—	—	—	—	—	

Note: A/D: Analog-to-Digital converter

B.2 Register Descriptions

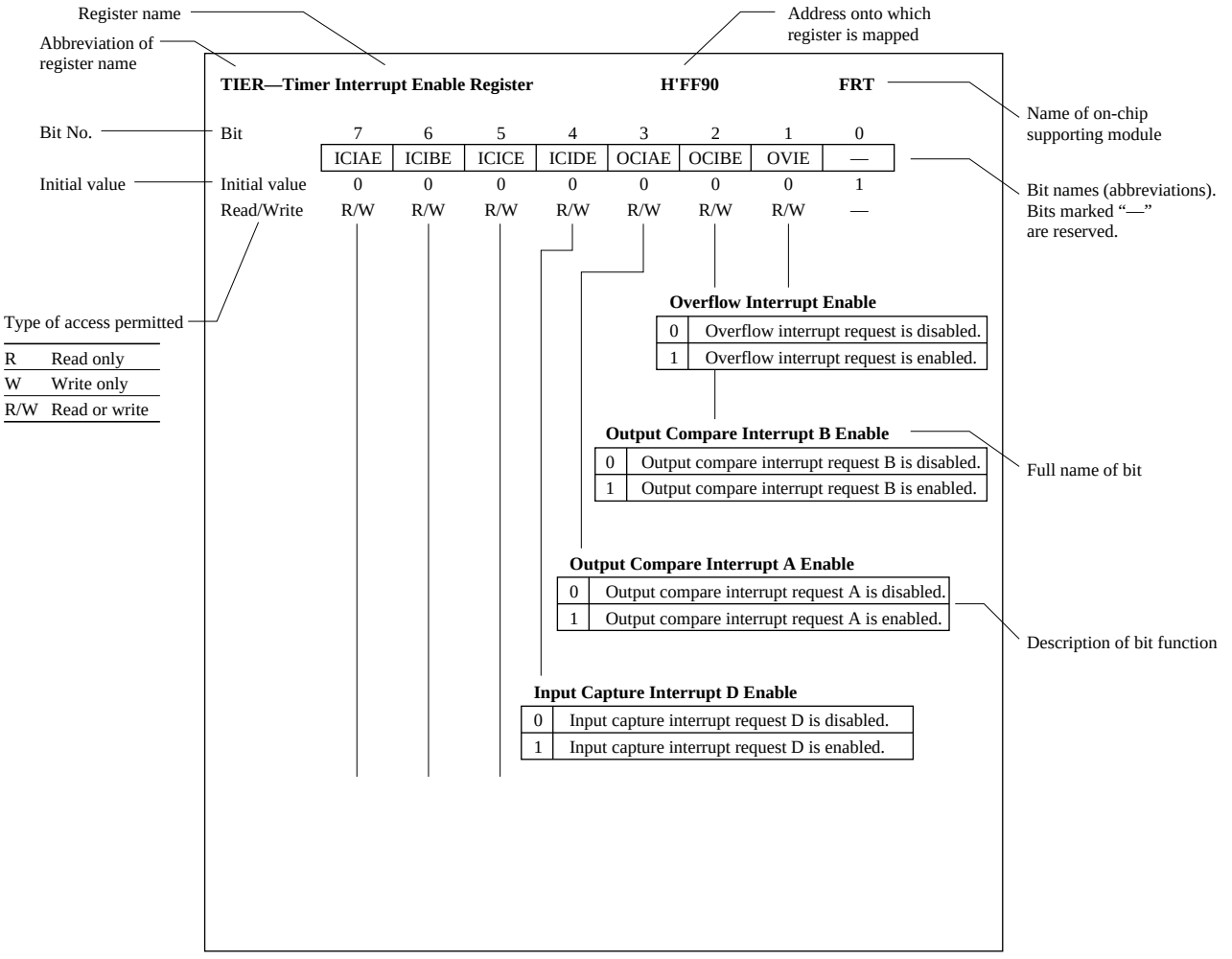

TIER—Timer Interrupt Enable Register **H'FF90** **FRT**

Bit	7	6	5	4	3	2	1	0
	ICIAE	ICIBE	ICICE	ICIDE	OCIAE	OCIBE	OVIE	—
Initial value	0	0	0	0	0	0	0	1
Read/Write	R/W	R/W	R/W	R/W	R/W	R/W	R/W	—

Overflow Interrupt Enable

0	Overflow interrupt request is disabled.
1	Overflow interrupt request is enabled.

Output Compare Interrupt B Enable

0	Output compare interrupt request B is disabled.
1	Output compare interrupt request B is enabled.

Output Compare Interrupt A Enable

0	Output compare interrupt request A is disabled.
1	Output compare interrupt request A is enabled.

Input Capture Interrupt D Enable

0	Input capture interrupt request D is disabled.
1	Input capture interrupt request D is enabled.

Input Capture Interrupt C Enable

0	Input capture interrupt request C is disabled.
1	Input capture interrupt request C is enabled.

Input Capture Interrupt B Enable

0	Input capture interrupt request B is disabled.
1	Input capture interrupt request B is enabled.

Input Capture Interrupt A Enable

0	Input capture interrupt request A is disabled.
1	Input capture interrupt request A is enabled.

TCSR—Timer Control/Status Register **H'FF91** **FRT**

Bit	7	6	5	4	3	2	1	0
	ICFA	ICFB	ICFC	ICFD	OCFA	OCFB	OVF	CCLRA
Initial value	0	0	0	0	0	0	0	0
Read/Write	R/(W)*	R/(W)*	R/(W)*	R/(W)*	R/(W)*	R/(W)*	R/(W)*	R/W

Counter Clear A

0	FRC count is not cleared.
1	FRC count is cleared by compare-match A.

Timer Overflow Flag

0	Cleared when CPU reads OVF = “1,” then writes “0” in OVF.
1	Set when FRC changes from H'FFFF to H'0000.

Output Compare Flag B

0	Cleared when CPU reads OCFB = “1”, then writes “0” in OCFB.
1	Set when FRC = OCRB.

Output Compare Flag A

0	Cleared when CPU reads OCFA = “1”, then writes “0” in OCFA.
1	Set when FRC = OCRA.

Input Capture Flag D

0	Cleared when CPU reads ICFD = “1”, then writes “0” in ICFD.
1	Set by FTID input.

Input Capture Flag C

0	Cleared when CPU reads ICFC = “1”, then writes “0” in ICFC.
1	Set by FTIC input.

Input Capture Flag B

0	Cleared when CPU reads ICFB = “1”, then writes “0” in ICFB.
1	Set when FTIB input causes FRC to be copied to ICRB.

Input Capture Flag A

0	Cleared when CPU reads ICFA = “1”, then writes “0” in ICFA.
1	Set when FTIA input causes FRC to be copied to ICRA.

Note: * Software can write a “0” in bits 7 to 1 to clear the flags, but cannot write a “1” in these bits.

FRC (H and L)—Free-Running Counter **H'FF92, H'FF93** **FRT**

Bit	7	6	5	4	3	2	1	0
Initial value	0	0	0	0	0	0	0	0
Read/Write	R/W	R/W	R/W	R/W	R/W	R/W	R/W	R/W

Count value

OCRA (H and L)—Output Compare Register A **H'FF94, H'FF95** **FRT**

Bit	7	6	5	4	3	2	1	0
Initial value	1	1	1	1	1	1	1	1
Read/Write	R/W	R/W	R/W	R/W	R/W	R/W	R/W	R/W

Continually compared with FRC. OCFA is set to “1” when OCRA = FRC.

OCRB (H and L)—Output Compare Register B **H'FF94, H'FF95** **FRT**

Bit	7	6	5	4	3	2	1	0
Initial value	1	1	1	1	1	1	1	1
Read/Write	R/W	R/W	R/W	R/W	R/W	R/W	R/W	R/W

Continually compared with FRC. OCFB is set to “1” when OCRB = FRC.

TCR—Timer Control Register **H'FF96** **FRT**

Bit	7	6	5	4	3	2	1	0
	IEDGA	IEDGB	IEDGC	IEDGD	BUFEA	BUFEB	CKS1	CKS0
Initial value	0	0	0	0	0	0	0	0
Read/Write	R/W	R/W	R/W	R/W	R/W	R/W	R/W	R/W

Clock Select

0	0	Internal clock source: Ø/2
0	1	Internal clock source: Ø/8
1	0	Internal clock source: Ø/32
1	1	External clock source: counted on rising edge

Buffer Enable B

0	ICRD is used for input capture D.
1	ICRD is buffer register for input capture B.

Buffer Enable A

0	ICRC is used for input capture C.
1	ICRC is buffer register for input capture A.

Input Edge Select D

0	Falling edge of FTID is valid.
1	Rising edge of FTID is valid.

Input Edge Select C

0	Falling edge of FTIC is valid.
1	Rising edge of FTIC is valid.

Input Edge Select B

0	Falling edge of FTIB is valid.
1	Rising edge of FTIB is valid.

Input Edge Select A

0	Falling edge of FTIA is valid.
1	Rising edge of FTIA is valid.

TOCR—Timer Output Compare Control Register H'FF97 FRT

Bit	7	6	5	4	3	2	1	0
	—	—	—	OCRS	OEA	OEB	OLVLA	OLVLB
Initial value	1	1	1	0	0	0	0	0
Read/Write	—	—	—	R/W	R/W	R/W	R/W	R/W

Output Level B

0	Compare-match B causes “0” output.
1	Compare-match B causes “1” output.

Output Level A

0	Compare-match A causes “0” output.
1	Compare-match A causes “1” output.

Output Enable B

0	Output compare B output is disabled.
1	Output compare B output is enabled.

Output Enable A

0	Output compare A output is disabled.
1	Output compare A output is enabled.

Output Compare Register Select

0	The CPU can access OCRA.
1	The CPU can access OCRB.

ICRA (H and L)—Input Capture Register A H'FF98, H'FF99 FRT

Bit	7	6	5	4	3	2	1	0
Initial value	0	0	0	0	0	0	0	0
Read/Write	R	R	R	R	R	R	R	R

Contains FRC count captured on FTIA input.

ICRB (H and L)—Input Capture Register B **H'FF9A, H'FF9B** **FRT**

Bit	7	6	5	4	3	2	1	0
Initial value	0	0	0	0	0	0	0	0
Read/Write	R	R	R	R	R	R	R	R

Contains FRC count captured on FTIB input.

ICRC (H and L)—Input Capture Register C **H'FF9C, H'FF9D** **FRT**

Bit	7	6	5	4	3	2	1	0
Initial value	0	0	0	0	0	0	0	0
Read/Write	R	R	R	R	R	R	R	R

Contains FRC count captured on FTIC input, or old ICRA value in buffer mode.

ICRD (H and L)—Input Capture Register D **H'FF9E, H'FF9F** **FRT**

Bit	7	6	5	4	3	2	1	0
Initial value	0	0	0	0	0	0	0	0
Read/Write	R	R	R	R	R	R	R	R

Contains FRC count captured on FTID input, or old ICRB value in buffer mode.

P1PCR—Port 1 Input Pull-Up Control Register H'FFAC Port 1

Bit	7	6	5	4	3	2	1	0
	$P1_7PCR$	$P1_6PCR$	$P1_5PCR$	$P1_4PCR$	$P1_3PCR$	$P1_2PCR$	$P1_1PCR$	$P1_0PCR$
Initial value	0	0	0	0	0	0	0	0
Read/Write	R/W	R/W	R/W	R/W	R/W	R/W	R/W	R/W

Port 1 Input Pull-Up Control

0	Input pull-up transistor is off.
1	Input pull-up transistor is on.

P2PCR—Port 2 Input Pull-Up Control Register H'FFAD Port 2

Bit	7	6	5	4	3	2	1	0
	$P2_7PCR$	$P2_6PCR$	$P2_5PCR$	$P2_4PCR$	$P2_3PCR$	$P2_2PCR$	$P2_1PCR$	$P2_0PCR$
Initial value	0	0	0	0	0	0	0	0
Read/Write	R/W	R/W	R/W	R/W	R/W	R/W	R/W	R/W

Port 2 Input Pull-Up Control

0	Input pull-up transistor is off.
1	Input pull-up transistor is on.

P3PCR—Port 3 Input Pull-Up Control Register H'FFAE Port 3

Bit	7	6	5	4	3	2	1	0
	$P3_7PCR$	$P3_6PCR$	$P3_5PCR$	$P3_4PCR$	$P3_3PCR$	$P3_2PCR$	$P3_1PCR$	$P3_0PCR$
Initial value	0	0	0	0	0	0	0	0
Read/Write	R/W	R/W	R/W	R/W	R/W	R/W	R/W	R/W

Port 3 Input Pull-Up Control

0	Input pull-up transistor is off.
1	Input pull-up transistor is on.

P1DDR—Port 1 Data Direction Register **H'FFB0** **Port 1**

Bit	7	6	5	4	3	2	1	0
	$P1_7$DDR	$P1_6$DDR	$P1_5$DDR	$P1_4$DDR	$P1_3$DDR	$P1_2$DDR	$P1_1$DDR	$P1_0$DDR
Mode 1								
Initial value	1	1	1	1	1	1	1	1
Read/Write	—	—	—	—	—	—	—	—
Modes 2 and 3								
Initial value	0	0	0	0	0	0	0	0
Read/Write	W	W	W	W	W	W	W	W

Port 1 Input/Output Control

0	Input port
1	Output port

P1DR—Port 1 Data Register **H'FFB2** **Port 1**

Bit	7	6	5	4	3	2	1	0
	$P1_7$	$P1_6$	$P1_5$	$P1_4$	$P1_3$	$P1_2$	$P1_1$	$P1_0$
Initial value	0	0	0	0	0	0	0	0
Read/Write	R/W	R/W	R/W	R/W	R/W	R/W	R/W	R/W

P2DDR—Port 2 Data Direction Register **H'FFB1** **Port 2**

Bit	7	6	5	4	3	2	1	0
	$P2_7DDR$	$P2_6DDR$	$P2_5DDR$	$P2_4DDR$	$P2_3DDR$	$P2_2DDR$	$P2_1DDR$	$P2_0DDR$
Mode 1								
Initial value	1	1	1	1	1	1	1	1
Read/Write	—	—	—	—	—	—	—	—
Modes 2 and 3								
Initial value	0	0	0	0	0	0	0	0
Read/Write	W	W	W	W	W	W	W	W

Port 2 Input/Output Control

0	Input port
1	Output port

P2DR—Port 2 Data Register **H'FFB3** **Port 2**

Bit	7	6	5	4	3	2	1	0
	$P2_7$	$P2_6$	$P2_5$	$P2_4$	$P2_3$	$P2_2$	$P2_1$	$P2_0$
Initial value	0	0	0	0	0	0	0	0
Read/Write	R/W	R/W	R/W	R/W	R/W	R/W	R/W	R/W

P3DDR—Port 3 Data Direction Register **H'FFB4** **Port 3**

Bit	7	6	5	4	3	2	1	0
	$P3_7DDR$	$P3_6DDR$	$P3_5DDR$	$P3_4DDR$	$P3_3DDR$	$P3_2DDR$	$P3_1DDR$	$P3_0DDR$
Initial value	0	0	0	0	0	0	0	0
Read/Write	W	W	W	W	W	W	W	W

Port 3 Input/Output Control

0	Input port
1	Output port

P3DR—Port 3 Data Register **H'FFB6** **Port 3**

Bit	7	6	5	4	3	2	1	0
	$P3_7$	$P3_6$	$P3_5$	$P3_4$	$P3_3$	$P3_2$	$P3_1$	$P3_0$
Initial value	0	0	0	0	0	0	0	0
Read/Write	R/W	R/W	R/W	R/W	R/W	R/W	R/W	R/W

P4DDR—Port 4 Data Direction Register **H'FFB5** **Port 4**

Bit	7	6	5	4	3	2	1	0
	$P4_7$DDR	$P4_6$DDR	$P4_5$DDR	$P4_4$DDR	$P4_3$DDR	$P4_2$DDR	$P4_1$DDR	$P4_0$DDR
Initial value	0	0	0	0	0	0	0	0
Read/Write	W	W	W	W	W	W	W	W

Port 4 Input/Output Control

0	Input port
1	Output port

P4DR—Port 4 Data Register **H'FFB7** **Port 4**

Bit	7	6	5	4	3	2	1	0
	$P4_7$	$P4_6$	$P4_5$	$P4_4$	$P4_3$	$P4_2$	$P4_1$	$P4_0$
Initial value	0	*	0	0	0	0	0	0
Read/Write	R/W	R/W	R/W	R/W	R/W	R/W	R/W	R/W

Note: * Determined by the level at pin $P4_6$.

P5DDR—Port 5 Data Direction Register **H'FFB8** **Port 5**

Bit	7	6	5	4	3	2	1	0
	—	—	—	—	—	$P5_2$DDR	$P5_1$DDR	$P5_0$DDR
Initial value	1	1	1	1	1	0	0	0
Read/Write	—	—	—	—	—	W	W	W

Port 5 Input/Output Control

0	Input port
1	Output port

P5DR—Port 5 Data Register **H'FFBA** **Port 5**

Bit	7	6	5	4	3	2	1	0
	—	—	—	—	—	$P5_2$	$P5_1$	$P5_0$
Initial value	1	1	1	1	1	0	0	0
Read/Write	—	—	—	—	—	R/W	R/W	R/W

P6DDR—Port 6 Data Direction Register **H'FFB9** **Port 6**

Bit	7	6	5	4	3	2	1	0
	$P6_7$DDR	$P6_6$DDR	$P6_5$DDR	$P6_4$DDR	$P6_3$DDR	$P6_2$DDR	$P6_1$DDR	$P6_0$DDR
Initial value	0	0	0	0	0	0	0	0
Read/Write	W	W	W	W	W	W	W	W

Port 6 Input/Output Control

0	Input port
1	Output port

P6DR—Port 6 Data Register **H'FFBB** **Port 6**

Bit	7	6	5	4	3	2	1	0
	$P6_7$	$P6_6$	$P6_5$	$P6_4$	$P6_3$	$P6_2$	$P6_1$	$P6_0$
Initial value	0	0	0	0	0	0	0	0
Read/Write	R/W	R/W	R/W	R/W	R/W	R/W	R/W	R/W

P7DR—Port 7 Data Register **H'FFBE** **Port 7**

Bit	7	6	5	4	3	2	1	0
	$P7_7$	$P7_6$	$P7_5$	$P7_4$	$P7_3$	$P7_2$	$P7_1$	$P7_0$
Initial value	*	*	*	*	*	*	*	*
Read/Write	R	R	R	R	R	R	R	R

Note: * Depends on the levels of pins $P7_7$ to $P7_0$.

STCR—Serial/Timer Control Register **H'FFC3** **TMR0/1**

Bit	7	6	5	4	3	2	1	0
	—	—	—	—	—	MPE	ICKS1	ICKS0
Initial value	1	1	1	1	1	0	0	0
Read/Write	—	—	—	—	—	R/W	R/W	R/W

Multiprocessor Enable

0	Multiprocessor communication function is disabled.
1	Multiprocessor communication function is enabled.

Internal Clock Source Select

See TCR under TMR0 and TMR1.

SYSCR—System Control Register **H'FFC4** **System Control**

Bit	7	6	5	4	3	2	1	0
	SSBY	STS2	STS1	STS0	—	NMIEG	—	RAME
Initial value	0	0	0	0	1	0	1	1
Read/Write	R/W	R/W	R/W	R/W	—	R/W	—	R/W

RAM Enable

0	On-chip RAM is disabled.
1	On-chip RAM is enabled.

NMI Edge

0	Falling edge of $\overline{\text{NMI}}$ is detected.
1	Rising edge of $\overline{\text{NMI}}$ is detected.

Standby Timer Select

0	0	0	Clock settling time = 8192 states
0	0	1	Clock settling time = 16384 states
0	1	0	Clock settling time = 32768 states
0	1	1	Clock settling time = 65536 states
1	–	–	Clock settling time = 131072 states

Software Standby

0	SLEEP instruction causes transition to sleep mode.
1	SLEEP instruction causes transition to software standby mode.

MDCR—Mode Control Register **H'FFC5** **System Control**

Bit	7	6	5	4	3	2	1	0
	—	—	—	—	—	—	MDS1	MDS0
Initial value	1	1	1	0	0	1	*	*
Read/Write	—	—	—	—	—	—	R	R

Mode Select Bits

Value at mode pins.

Note: * Determined by inputs at pins MD_1 and MD_0.

ISCR—IRQ Sense Control Register **H'FFC6** **System Control**

Bit	7	6	5	4	3	2	1	0
	—	—	—	—	—	IRQ_2SC	IRQ_1SC	IRQ_0SC
Initial value	1	1	1	1	1	0	0	0
Read/Write	—	—	—	—	—	R/W	R/W	R/W

IRQ_0 to IRQ_2 Sense Control

0	$\overline{IRQ_i}$ is level-sensed (active Low).
1	$\overline{IRQ_i}$ is edge-sensed (falling edge).

IER—IRQ Enable Register **H'FFC7** **System Control**

Bit	7	6	5	4	3	2	1	0
	—	—	—	—	—	IRQ_2E	IRQ_1E	IRQ_0E
Initial value	1	1	1	1	1	0	0	0
Read/Write	—	—	—	—	—	R/W	R/W	R/W

IRQ_0 to IRQ_2 Enable

0	IRQ_i is disabled.
1	IRQ_i is enabled.

TCR—Timer Control Register **H'FFC8** **TMR0**

Bit	7	6	5	4	3	2	1	0
	CMIEB	CMIEA	OVIE	CCLR1	CCLR0	CKS2	CKS1	CKS0
Initial value	0	0	0	0	0	0	0	0
Read/Write	R/W	R/W	R/W	R/W	R/W	R/W	R/W	R/W

Clock Select

TCR			STCR		
CKS2	CKS1	CKS0	ICKS1	ICKS0	Description
0	0	0	—	—	Timer stopped
0	0	1	—	0	Ø/8 internal clock, falling edge
0	0	1	—	1	Ø/2 internal clock, falling edge
0	1	0	—	0	Ø/64 internal clock, falling edge
0	1	0	—	1	Ø/32 internal clock, falling edge
0	1	1	—	0	Ø/1024 internal clock, falling edge
0	1	1	—	1	Ø/256 internal clock, falling edge
1	0	0	—	—	Timer stopped
1	0	1	—	—	External clock, rising edge
1	1	0	—	—	External clock, falling edge
1	1	1	—	—	External clock, rising and falling edges

Counter Clear

0	0	Counter is not cleared.
0	1	Cleared by compare-match A.
1	0	Cleared by compare-match B.
1	1	Cleared on rising edge of external reset input.

Timer Overflow Interrupt Enable

0	Overflow interrupt request is disabled.
1	Overflow interrupt request is enabled.

Compare-Match Interrupt Enable A

0	Compare-match A interrupt request is disabled.
1	Compare-match A interrupt request is enabled.

Compare-Match Interrupt Enable B

0	Compare-match B interrupt request is disabled.
1	Compare-match B interrupt request is enabled.

TCSR—Timer Control/Status Register **H'FFC9** **TMR0**

Bit	7	6	5	4	3	2	1	0
	CMFB	CMFA	OVF	—	OS3*2	OS2*2	OS1*2	OS0*2
Initial value	0	0	0	1	0	0	0	0
Read/Write	R/(W)*1	R/(W)*1	R/(W)*1	—	R/W	R/W	R/W	R/W

Output Select

0	0	No change on compare-match A.
0	1	Output “0” on compare-match A.
1	0	Output “1” on compare-match A.
1	1	Invert (toggle) output on compare-match A.

Output Select

0	0	No change on compare-match B.
0	1	Output “0” on compare-match B.
1	0	Output “1” on compare-match B.
1	1	Invert (toggle) output on compare-match B.

Timer Overflow Flag

0	Cleared when CPU reads OVF = “1,” then writes “0” in OVF.
1	Set when TCNT changes from H'FF to H'00.

Compare-Match Flag A

0	Cleared when CPU reads CMFA = “1,” then writes “0” in CMFA.
1	Set when TCNT = TCORA.

Compare-Match Flag B

0	Cleared from when CPU reads CMFB = “1,” then writes “0” in CMFB.
1	Set when TCNT = TCORB.

Notes: *1 Software can write a “0” in bits 7 to 5 to clear the flags, but cannot write a “1” in these bits.

*2 When all four bits (OS3 to OS0) are cleared to “0,” output is disabled.

TCORA—Time Constant Register A **H'FFCA** **TMR0**

Bit	7	6	5	4	3	2	1	0
Initial value	1	1	1	1	1	1	1	1
Read/Write	R/W	R/W	R/W	R/W	R/W	R/W	R/W	R/W

The CMFA bit is set to “1” when TCORA = TCNT.

TCORB—Time Constant Register B **H'FFCB** **TMR0**

Bit	7	6	5	4	3	2	1	0
Initial value	1	1	1	1	1	1	1	1
Read/Write	R/W	R/W	R/W	R/W	R/W	R/W	R/W	R/W

The CMFB bit is set to “1” when TCORB = TCNT.

TCNT—Timer Counter **H'FFCC** **TMR0**

Bit	7	6	5	4	3	2	1	0
Initial value	0	0	0	0	0	0	0	0
Read/Write	R/W	R/W	R/W	R/W	R/W	R/W	R/W	R/W

Count value

TCR—Timer Conrol Register **H'FFD0** **TMR1**

Bit	7	6	5	4	3	2	1	0
	CMIEB	CMIEA	OVIE	CCLR1	CCLR0	CKS2	CKS1	CKS0
Initial value	0	0	0	0	0	0	0	0
Read/Write	R/W	R/W	R/W	R/W	R/W	R/W	R/W	R/W

Clock Select

TCR			STCR		
CKS2	CKS1	CKS0	ICKS1	ICKS0	Description
0	0	0	—	—	Timer stopped
0	0	1	0	—	Ø/8 internal clock, falling edge
0	0	1	1	—	Ø/2 internal clock, falling edge
0	1	0	0	—	Ø/64 internal clock, falling edge
0	1	0	1	—	Ø/128 internal clock, falling edge
0	1	1	0	—	Ø/1024 internal clock, falling edge
0	1	1	1	—	Ø/2048 internal clock, falling edge
1	0	0	—	—	Timer stopped
1	0	1	—	—	External clock, rising edge
1	1	0	—	—	External clock, falling edge
1	1	1	—	—	External clock, rising and falling edges

Counter Clear

0	0	Counter is not cleared.
0	1	Cleared by compare-match A.
1	0	Cleared by compare-match B.
1	1	Cleared on rising edge of external reset input.

Timer Overflow Interrupt Enable

0	Overflow interrupt request is disabled.
1	Overflow interrupt request is enabled.

Compare-Match Interrupt Enable A

0	Compare-match A interrupt request is disabled.
1	Compare-match A interrupt request is enabled.

Compare-Match Interrupt Enable B

0	Compare-match B interrupt request is disabled.
1	Compare-match B interrupt request is enabled.

TCSR—Timer Control/Status Register **H'FFD1** **TMR1**

Bit	7	6	5	4	3	2	1	0
	CMFB	CMFA	OVF	—	OS3*2	OS2*2	OS1*2	OS0*2
Initial value	0	0	0	1	0	0	0	0
Read/Write	R/(W)*1	R/(W)*1	R/(W)*1	—	R/W	R/W	R/W	R/W

Notes: Bit functions are the same as for TMR0.

*1 Software can write a “0” in bits 7 to 5 to clear the flags, but cannot write a “1” in these bits.

*2 When all four bits (OS3 to OS0) are cleared to “0,” output is disabled.

TCORA—Time Constant Register A **H'FFD2** **TMR1**

Bit	7	6	5	4	3	2	1	0
Initial value	1	1	1	1	1	1	1	1
Read/Write	R/W	R/W	R/W	R/W	R/W	R/W	R/W	R/W

Note: Bit functions are the same as for TMR0.

TCORB—Time Constant Register B **H'FFD3** **TMR1**

Bit	7	6	5	4	3	2	1	0
Initial value	1	1	1	1	1	1	1	1
Read/Write	R/W	R/W	R/W	R/W	R/W	R/W	R/W	R/W

Note: Bit functions are the same as for TMR0.

TCNT—Timer Counter **H'FFD4** **TMR1**

Bit	7	6	5	4	3	2	1	0
Initial value	0	0	0	0	0	0	0	0
Read/Write	R/W	R/W	R/W	R/W	R/W	R/W	R/W	R/W

Note: Bit functions are the same as for TMR0.

SMR—Serial Mode Register **H'FFD8** **SCI**

Bit	7	6	5	4	3	2	1	0
	C/$\overline{A}$	CHR	PE	O/$\overline{E}$	STOP	MP	CKS1	CKS0
Initial value	0	0	0	0	0	0	0	0
Read/Write	R/W	R/W	R/W	R/W	R/W	R/W	R/W	R/W

Clock Select

0	0	Ø clock
0	1	Ø/4 clock
1	0	Ø/16 clock
1	1	Ø/64 clock

Multiprocessor Mode

0	Multiprocessor function disabled
1	Multiprocessor format selected

Stop Bit Length

0	One stop bit
1	Two stop bits

Parity Mode

0	Even parity
1	Odd parity

Parity Enable

0	Transmit: No parity bit added. Receive: Parity bit not checked.
1	Transmit: Parity bit added. Receive: Parity bit checked.

Character Length

0	8-Bit data length
1	7-Bit data length

Communication Mode

0	Asynchronous
1	Synchronous

BRR—Bit Rate Register **H'FFD9** **SCI**

Bit	7	6	5	4	3	2	1	0
Initial value	1	1	1	1	1	1	1	1
Read/Write	R/W	R/W	R/W	R/W	R/W	R/W	R/W	R/W

Constant that determines the bit rate

SCR—Serial Control Register **H'FFDA** **SCI**

Bit	7	6	5	4	3	2	1	0
	TIE	RIE	TE	RE	MPIE	TEIE	CKE1	CKE0
Initial value	0	0	0	0	0	0	0	0
Read/Write	R/W	R/W	R/W	R/W	R/W	R/W	R/W	R/W

Clock Enable 0

0	Serial clock not output
1	Serial clock output at SCK pin

Clock Enable 1

0	Internal clock
1	External clock

Transmit End Interrupt Enable

0	TSR-empty interrupt request is disabled.
1	TSR-empty interrupt request is enabled.

Multiprocessor Interrupt Enable

0	Multiprocessor receive interrupt function is disabled.
1	Multiprocessor receive interrupt function is enabled.

Receive Enable

0	Receive disabled
1	Receive enabled

Transmit Enable

0	Transmit disabled
1	Transmit enabled

Receive Interrupt Enable

0	Receive interrupt and receive error interrupt requests are disabled.
1	Receive interrupt and receive error interrupt requests are enabled.

Transmit Interrupt Enable

0	TDR-empty interrupt request is disabled.
1	TDR-empty interrupt request is enabled.

TDR—Transmit Data Register **H'FFDB** **SCI**

Bit	7	6	5	4	3	2	1	0
Initial value	1	1	1	1	1	1	1	1
Read/Write	R/W	R/W	R/W	R/W	R/W	R/W	R/W	R/W

Transmit data

SSR—Serial Status Register **H'FFDC** **SCI**

Bit	7	6	5	4	3	2	1	0
	TDRE	RDRF	ORER	FER	PER	TEND	MPB	MPBT
Initial value	1	0	0	0	0	0	0	0
Read/Write	R/(W)*	R/(W)*	R/(W)*	R/(W)*	R/(W)*	R	R	R/W

Multiprocessor Bit Transfer

0	Multiprocessor bit = “0” in transmit data.
1	Multiprocessor bit = “1” in transmit data.

Multiprocessor Bit

0	Multiprocessor bit = “0” in receive data.
1	Multiprocessor bit = “1” in receive data.

Transmit End

0	Cleared when CPU reads TDRE = “1,” then writes “0” in TDRE.
1	Set to “1” when TE = “0,” or when TDRE = “1” at the end of character transmission.

Parity Error

0	Cleared when CPU reads PER = “1,” then writes “0” in PER.
1	Set when a parity error occurs (parity of receive data does not match parity selected by O/$\overline{E}$ bit in SMR).

Framing Error

0	Cleared when CPU reads FER = “1,” then writes “0” in FER.
1	Set when a framing error occurs (stop bit is “0”).

Overrun Error

0	Cleared when CPU reads ORER = “1,” then writes “0” in ORER.
1	Set when an overrun error occurs (next data is completely received while RDRF bit is set to “1”).

Receive Data Register Full

0	Cleared when CPU reads RDRF = “1,” then writes “0” in RDRF.
1	Set when one character is received normally and transferred from RSR to RDR.

Transmit Data Register Empty

0	Cleared when CPU reads TDRE = “1,” then writes “0” in TDRE
1	Set when: 1. Data is transferred from TDR to TSR. 2. TE is cleared while TDRE = “0.”

Note: * Software can write a “0” in bits 7 to 3 to clear the flags, but cannot write a “1” in these bits.

RDR—Receive Data Register **H'FFDD** **SCI**

Bit	7	6	5	4	3	2	1	0
Initial value	0	0	0	0	0	0	0	0
Read/Write	R	R	R	R	R	R	R	R

Receive data

ADDRn—A/D Data Register n (n = A, B, C, D) H'FFE0, H'FFE2, H'FFE4, H'FFE6 **A/D**

Bit	7	6	5	4	3	2	1	0
Initial value	0	0	0	0	0	0	0	0
Read/Write	R	R	R	R	R	R	R	R

A/D conversion result

ADCSR—A/D Control/Status Register **H'FFE8** **A/D**

Bit	7	6	5	4	3	2	1	0
	ADF	ADIE	ADST	SCAN	CKS	CH2	CH1	CH0
Initial value	0	0	0	0	0	0	0	0
Read/Write	R/(W)*	R/W	R/W	R/W	R/W	R/W	R/W	R/W

Channel Select

CH2	CH1	CH0	Single mode	Scan mode
0	0	0	AN_0	AN_0
	0	1	AN_1	AN_0, AN_1
	1	0	AN_2	AN_0 to AN_2
	1	1	AN_3	AN_0 to AN_3
1	0	0	AN_4	AN_4
	0	1	AN_5	AN_4, AN_5
	1	0	AN_6	AN_4 to AN_6
	1	1	AN_7	AN_4 to AN_7

Clock Select

0	Conversion time = 242 states (max)
1	Conversion time = 122 states (max)

Scan Mode

0	Single mode
1	Scan mode

A/D Start

0	A/D conversion is halted.
1	1. Single mode: One A/D conversion is performed, then this bit is automatically cleared to “0.” 2. Scan mode: A/D conversion starts and continues cyclically on all selected channels until “0” is written in this bit.

A/D Interrupt Enable

0	The A/D interrupt request (ADI) is disabled.
1	The A/D interrupt request (ADI) is enabled.

A/D End Flag

0	Cleared from “1” to “0” when CPU reads ADF = “1,” then writes “0” in ADF.
1	Set to “1” at the following times: 1. Single mode: at the completion of A/D conversion 2. Scan mode: when all selected channels have been converted.

Note: * Software can write a “0” in bit 7 to clear the flag, but cannot write a “1” in this bit.

ADCR—A/D Control Register **H'FFEA** **A/D**

Bit	7	6	5	4	3	2	1	0
	TRGE	—	—	—	—	—	—	CHS
Initial value	0	1	1	1	1	1	1	0
Read/Write	R/W	—	—	—	—	—	—	R/W

Channel Select

Reserved bit.

Trigger Enable

0	ADTRG is disabled.
1	ADTRG is enabled. A/D conversion can be started by external trigger, or by software.

Appendix C. Pin States

C.1 Pin States in Each Mode

Table C-1. Pin States

Pin name	MCU mode	Reset	Hardware standby	Software standby	Sleep mode	Normal operation
$P1_7$ – $P1_0$	1	Low	3-State	Low	Prev. state	A_7 – A_0
A_7 – A_0	2	3-State		Low if DDR = 1, Prev. state if DDR = 0	(Addr. output pins: last address accessed)	Addr. output or input port
	3			Prev. state		I/O port
$P2_7$ – $P2_0$	1	Low	3-State	Low	Prev. state	A_{15}–A_8 output
A_{15} – A_8	2	3-State		Low if DDR = 1, Prev. state if DDR = 0	(Addr. output pins: last address accessed)	Addr. output or input port
	3			Prev. state		I/O port
$P3_7$ – $P3_0$	1	3-State	3-State	3-State	3-State	D_7 – D_0
D_7 – D_0	2					
	3			Prev. state	Prev. state	I/O port
$P4_7/\overline{WAIT}$	1	3-State	3-State	3-State	3-State	$\overline{WAIT}$
	2					
	3			Prev. state	Prev. state	I/O port
$P4_6$/Ø	1	Clock	3-State	High	Clock	Clock
	2	output			output	output
	3	3-State		High if DDR = 1, 3-state if DDR = 0	Clock output if DDR = 1, 3-state if DDR = 0	Clock output if DDR = 1, input port if DDR = 0

Notes:
1. 3-State: High-impedance state
2. Prev. state: Previous state. Input ports are in the high-impedance state (with the MOS pull-up on if PCR = 1). Output ports hold their previous output level.
3. I/O port: Direction depends on the data direction (DDR) bit. Note that these pins may also be used by the on-chip supporting modules.
   See section 5, “I/O Ports,” for further information.

Table C-1. Pin States (cont.)

Pin name	MCU mode	Reset	Hardware standby	Software standby	Sleep mode	Normal operation
$P4_5$ – $P4_3$, $\overline{AS}$, $\overline{WR}$, $\overline{RD}$	1	High	3-State	High	High	$\overline{AS}$, $\overline{WR}$, $\overline{RD}$
	2					
	3	3-State		Prev. state	Prev. state	I/O port
$P4_2$ – $P4_0$	1	3-State	3-State	Prev. state	Prev. state	I/O port
	2					
	3					
$P5_2$ – $P5_0$	1	3-State	3-State	Prev. state*	Prev. state	I/O port
	2					
	3					
$P6_7$ – $P6_0$	1	3-State	3-State	Prev. state*	Prev. state	I/O port
	2					
	3					
$P7_7$ – $P7_0$	1	3-State	3-State	3-State	3-State	Input port
	2					
	3					

Notes:
1. 3-State: High-impedance state
2. Prev. state: Previous state. Input ports are in the high-impedance state (with the MOS pull-up on if PCR = 1). Output ports hold their previous output level.
3. I/O port: Direction depends on the data direction (DDR) bit. Note that these pins may also be used by the on-chip supporting modules.
   See section 5, “I/O Ports,” for further information.

* On-chip supporting modules are initialized, so these pins revert to I/O ports according to the DDR and DR bits.

Appendix D. Timing of Transition to and Recovery from Hardware Standby Mode

Timing of Transition to Hardware Standby Mode

(1) To retain RAM contents with the RAME bit cleared to “0” in SYSCR, drive the $\overline{\text{RES}}$ signal low 10 system clock cycles before the $\overline{\text{STBY}}$ signal goes low, as shown below. $\overline{\text{RES}}$ must remain low until $\overline{\text{STBY}}$ goes low (minimum delay from $\overline{\text{STBY}}$ low to $\overline{\text{RES}}$ high: 0 ns).

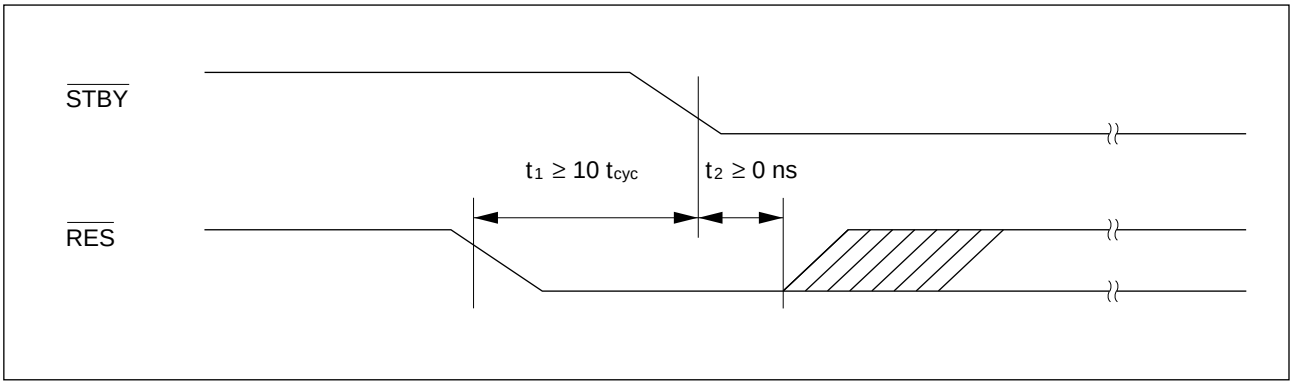

(2) When the RAME bit in SYSCR is set to “1” or it is not necessary to retain RAM contents, $\overline{\text{RES}}$ does not have to be driven low as in (1).

Timing of Recovery From Hardware Standby Mode: Drive the $\overline{\text{RES}}$ signal low approximately 100 ns before $\overline{\text{STBY}}$ goes high.

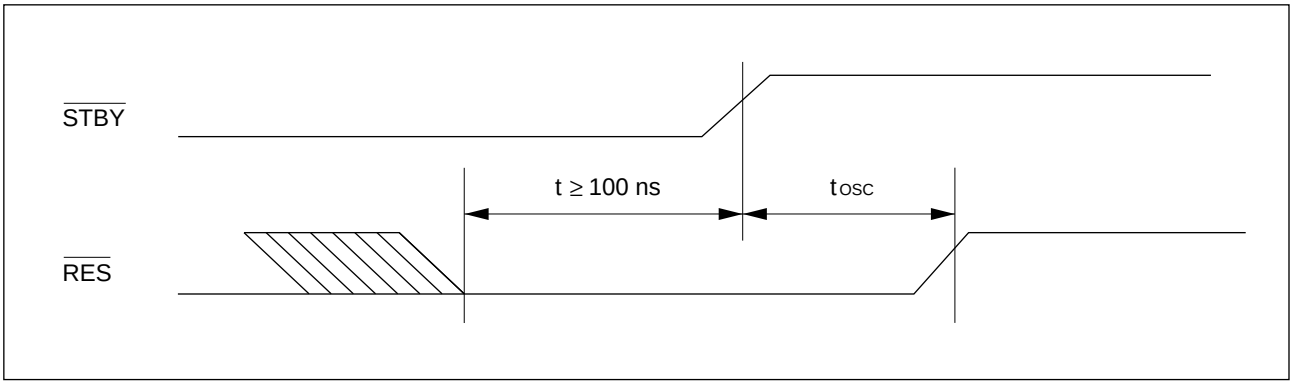

Appendix E. Package Dimensions

Figure E-1 shows the dimensions of the DC-64S package. Figure E-2 shows the dimensions of the DP-64S package. Figure E-3 shows the dimensions of the FP-64A package. Figure E-4 shows the dimensions of the CP-68 package.

Unit: mm

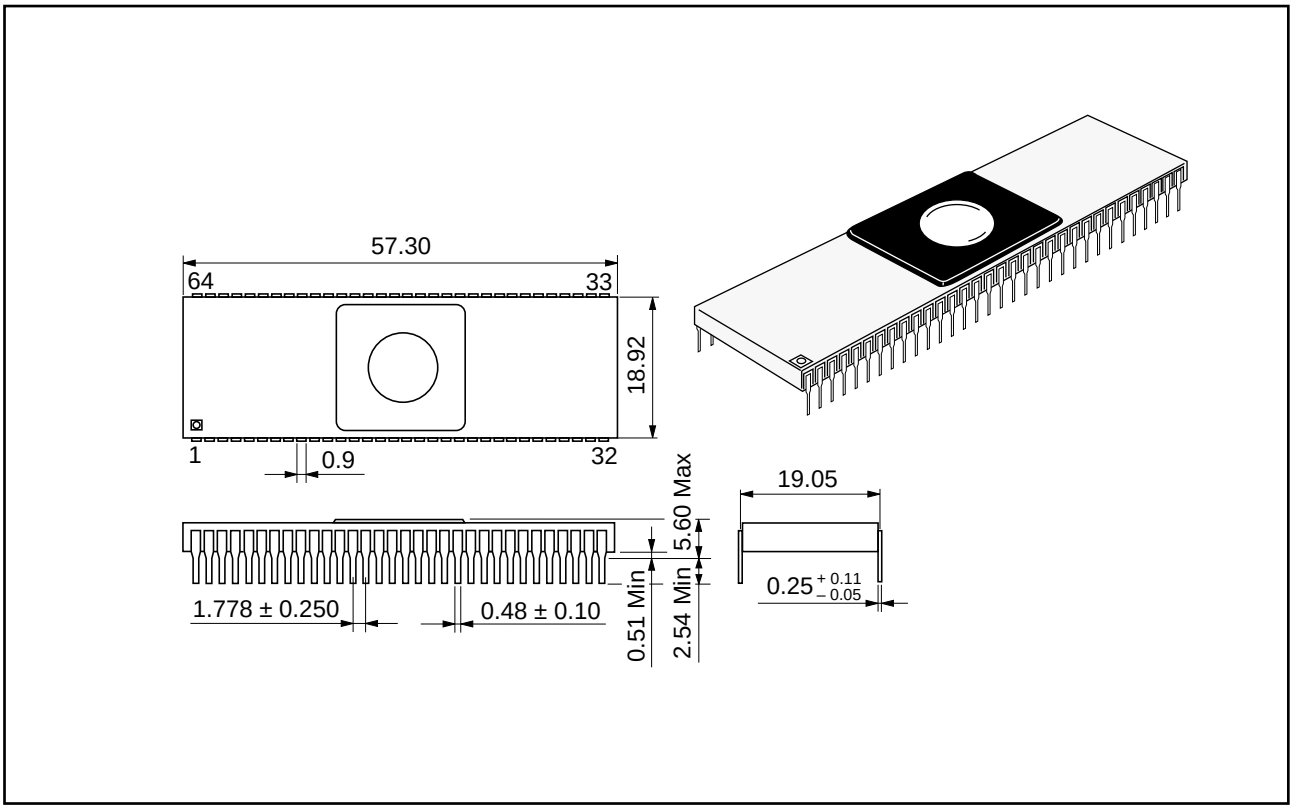

Figure E-1. Package Dimensions (DC-64S)

Unit: mm

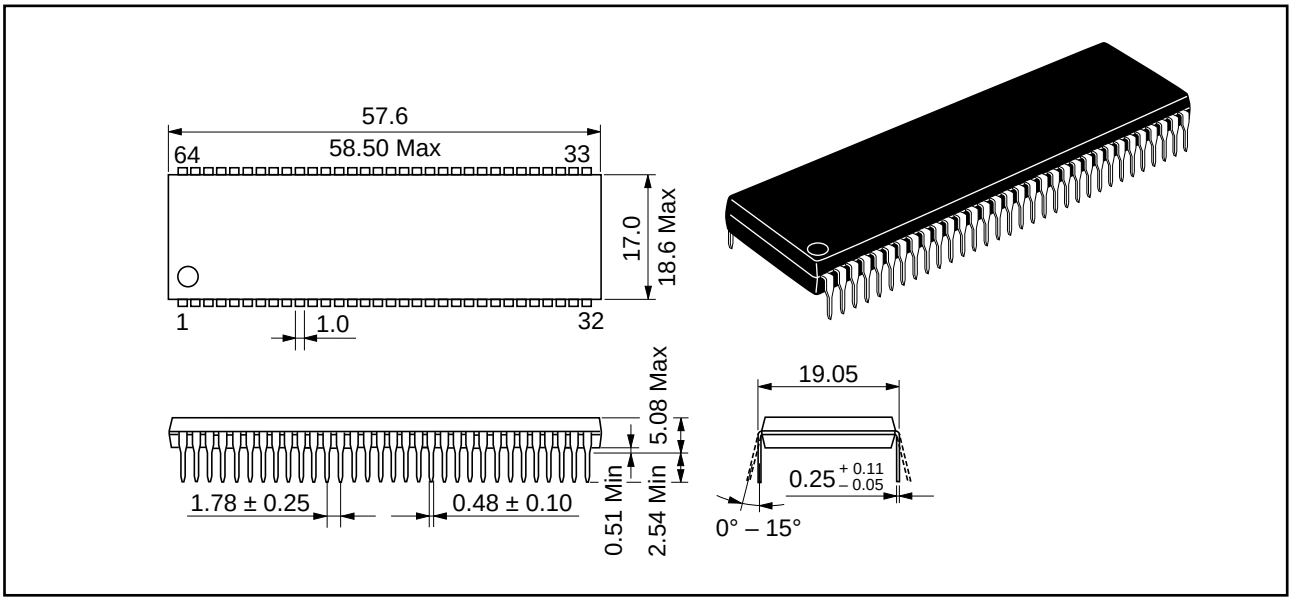

Figure E-2. Package Dimensions (DP-64S)

Unit: mm

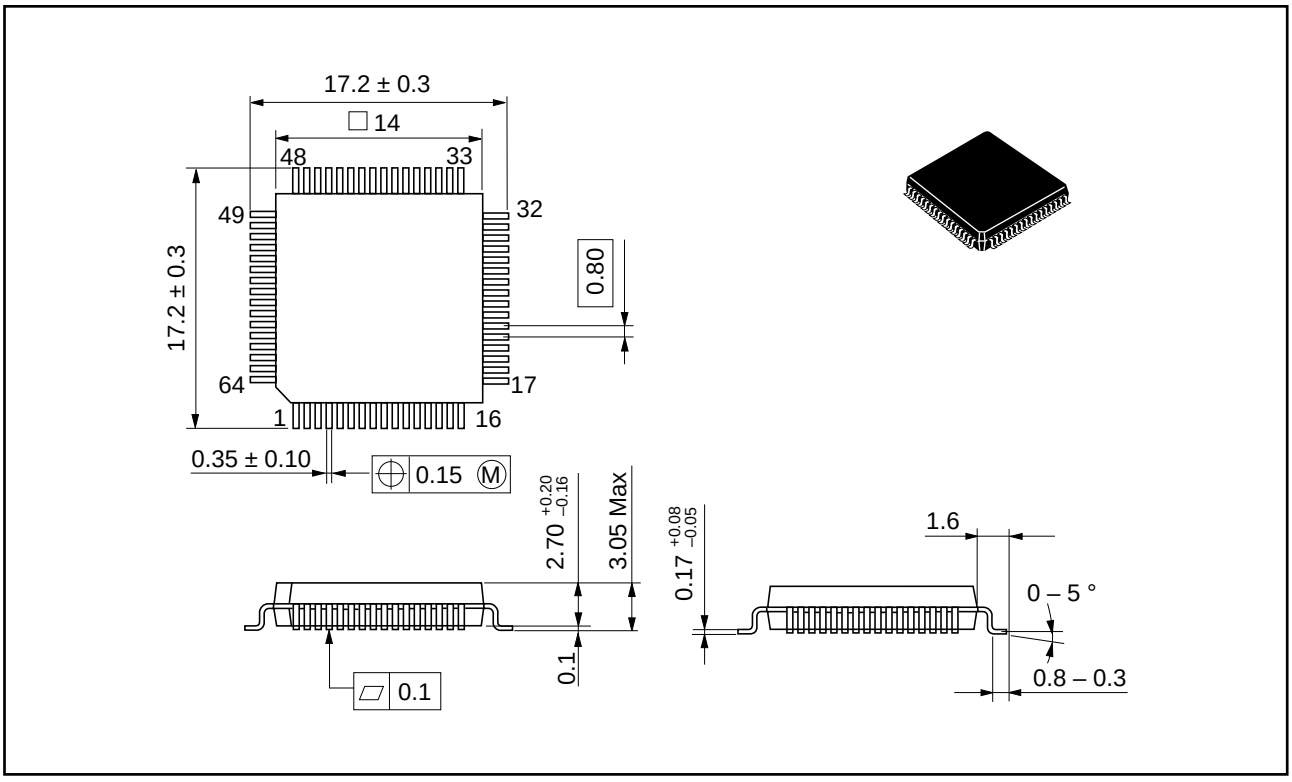

Figure E-3. Package Dimensions (FP-64A)

Unit: mm

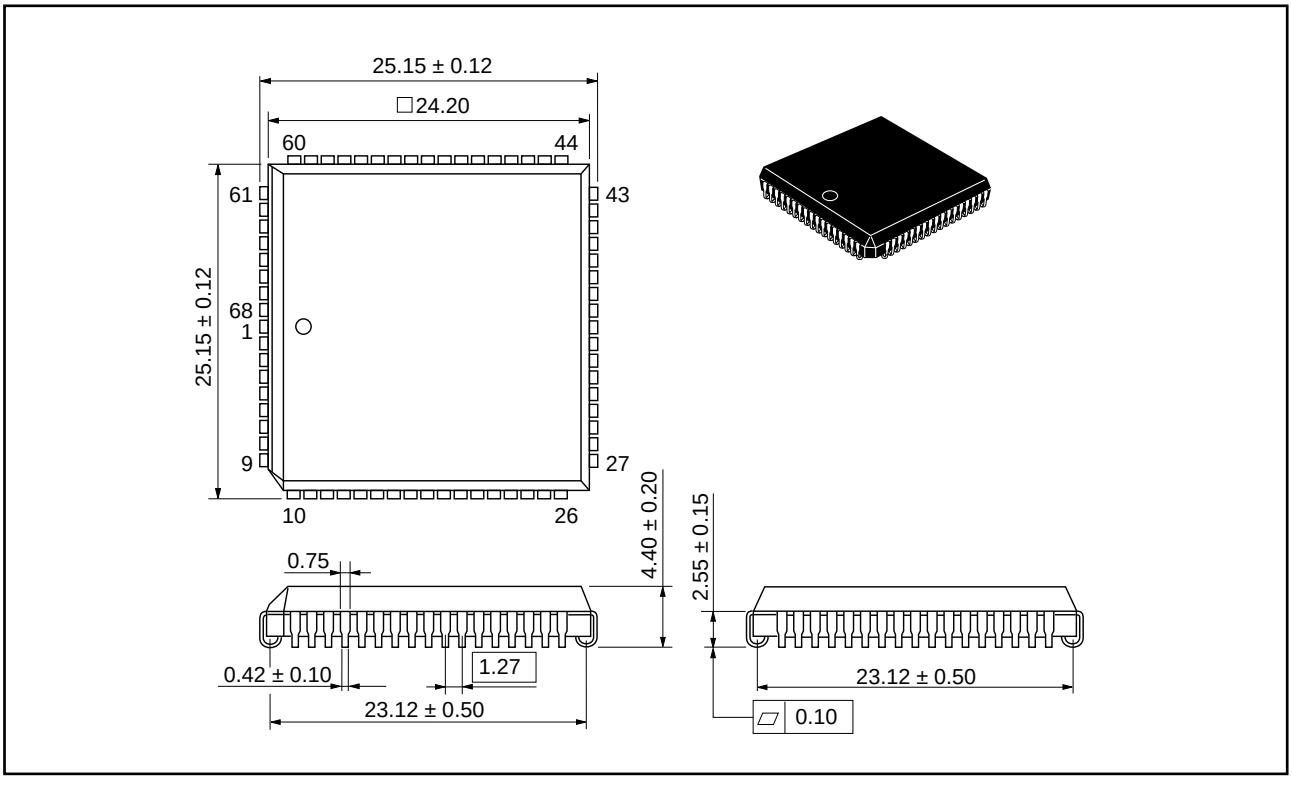

Figure E-4. Package Dimensions (CP-68)